THE DATASHEET OF

DS1251W-120

www.win-source.net 0086-755-83957316

19-6079; Rev 11/11

DS1251/DS1251P
4096K NV SRAM with Phantom Clock

FEATURES

- Real-Time Clock Keeps Track of Hundredths Of Seconds, Minutes, Hours, Days, Date of the Month, Months, and Years
- 512K x 8 NV SRAM Directly Replaces Volatile Static RAM or EEPROM
- Embedded Lithium Energy Cell Maintains Calendar Operation and Retains RAM Data
- Watch Function is Transparent to RAM Operation
- Automatic Leap Year Compensation Valid Up to 2100
- Over 10 Years of Data Retention in the Absence of Power
- Full 10% Operating Range
- Lithium Energy Source is Electrically Disconnected to Retain Freshness Until Power is Applied for the First Time
- DIP Module Only
  - Standard 32-Pin JEDEC Pinout
  - Upward Compatible with the DS1248
- PowerCap Module Board Only
  - Surface Mountable Package for Direct Connection to PowerCap Containing Battery and Crystal
  - Replaceable Battery (PowerCap)
  - Pin-for-Pin Compatible with Other Densities of DS124xP Phantom Clocks
- Underwriters Laboratories (UL) Recognized (www.maxim-ic.com/qa/info/ul/)

PIN CONFIGURATIONS

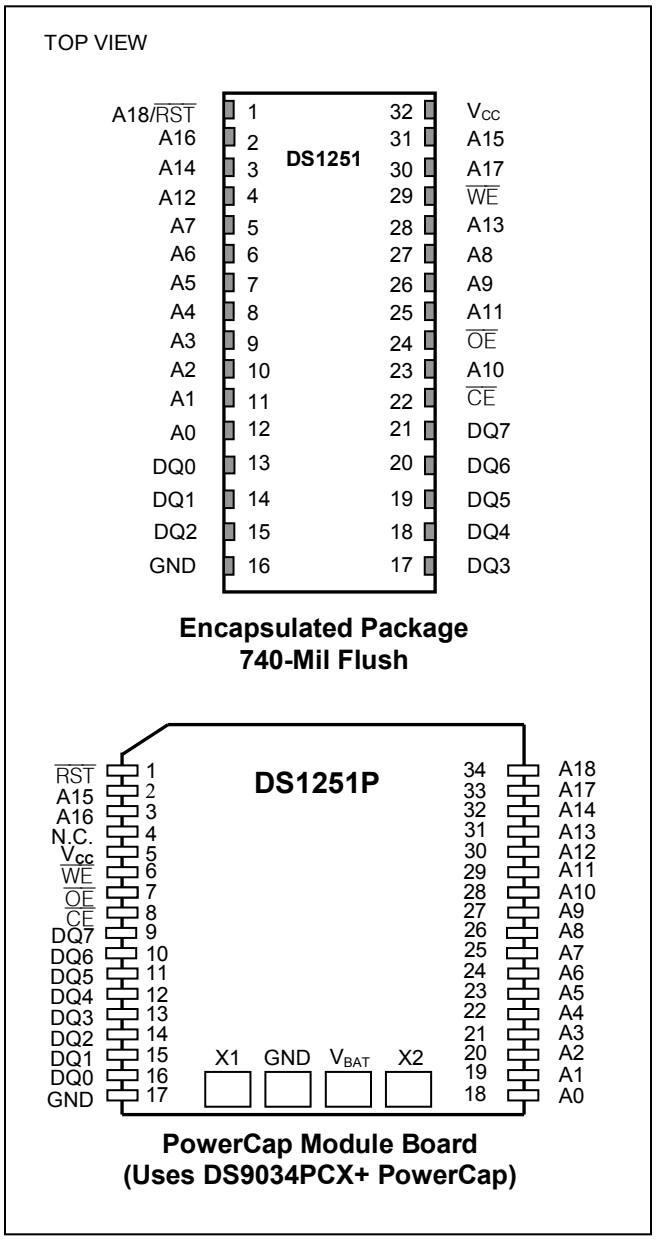

ORDERING INFORMATION

PART	TEMP RANGE	VOLTAGE RANGE (V)	PIN-PACKAGE
DS1251W-120+	0°C to +70°C	3.3	32 EDIP (0.740a)
DS1251W-120IND+	-40°C to +85°C	3.3	32 EDIP (0.740a)
DS1251WP-120+	0°C to +70°C	3.3	34 PowerCap*
DS1251WP-120IND+	-40°C to +85°C	3.3	34 PowerCap*
DS1251Y-70+	0°C to +70°C	5.0	32 EDIP (0.740a)
DS1251YP-70+	0°C to +70°C	5.0	34 PowerCap*
DS1251YP-70IND+	-40°C to +85°C	5.0	34 PowerCap*

+ Denotes a lead(Pb)-free/RoHS-compliant package.
**DS9034PCX+ or DS9034I-PCX+ (PowerCap) required. Must be ordered separately.*

PIN DESCRIPTION

PIN		NAME	FUNCTION
EDIP	PowerCap		
1	1	$\overline{RST}$	Active-Low Reset Input. This pin has an internal pullup resistor connected to V_{CC}.
1	34	A18	Address Inputs
2	3	A16	
3	32	A14	
4	30	A12	
5	25	A7	
6	24	A6	
7	23	A5	
8	22	A4	
9	21	A3	
10	20	A2	
11	19	A1	
12	18	A0	
23	28	A10	
25	29	A11	
26	27	A9	
27	26	A8	
28	31	A13	
30	33	A17	
31	2	A15	
13	16	DQ0	Data In/Data Out
14	15	DQ1	
15	14	DQ2	
17	13	DQ3	
18	12	DQ4	
19	11	DQ5	
20	10	DQ6	
21	9	DQ7	

PIN DESCRIPTION (continued)

PIN		NAME	FUNCTION
EDIP	PowerCap		
22	8	$\overline{CE}$	Active-Low Chip-Enable Input
24	7	$\overline{OE}$	Active-Low Output-Enable Input
29	6	$\overline{WE}$	Active-Low Write-Enable Input
32	5	V_{CC}	Power-Supply Input
—	4	N.C.	No Connection
16	17	GND	Ground

DESCRIPTION

The DS1251 4096K NV SRAM with Phantom Clock is a fully static nonvolatile RAM (organized as 512K words by 8 bits) with a built-in real-time clock. The DS1251Y has a self-contained lithium energy source and control circuitry, which constantly monitors V_{CC} for an out-of-tolerance condition. When such a condition occurs, the lithium energy source is automatically switched on and write protection is unconditionally enabled to prevent garbled data in both the memory and real-time clock.

The phantom clock provides timekeeping information including hundredths of seconds, seconds, minutes, hours, days, dates, months, and years. The date at the end of the month is automatically adjusted for months with fewer than 31 days, including correction for leap years. The phantom clock operates in either 24-hour or 12-hour format with an AM/PM indicator.

PACKAGES

The DS1251 is available in two packages: 32-pin DIP and 34-pin PowerCap module. The 32-pin DIP style module integrates the crystal, lithium energy source, and silicon in one package. The 34-pin PowerCap module board is designed with contacts for connection to a separate PowerCap (DS9034PCX) that contains the crystal and battery. This design allows the PowerCap to be mounted on top of the DS1251P after the completion of the surface mount process. Mounting the PowerCap after the surface mount process prevents damage to the crystal and battery because of the high temperatures required for solder reflow. The PowerCap is keyed to prevent reverse insertion. The PowerCap Module Board and PowerCap are ordered separately and shipped in separate containers.

RAM READ MODE

The DS1251 executes a read cycle whenever $\overline{WE}$ (write enable) is inactive (high) and $\overline{CE}$ (chip enable) is active (low). The unique address specified by the 19 address inputs (A0–A18) defines which of the 512K bytes of data is to be accessed. Valid data will be available to the eight data-output drivers within t_{ACC} (access time) after the last address input signal is stable, providing that $\overline{CE}$ and $\overline{OE}$ (output enable) access times and states are also satisfied. If $\overline{OE}$ and $\overline{CE}$ access times are not satisfied, then data access must be measured from the later occurring signal ($\overline{CE}$ or $\overline{OE}$) and the limiting parameter is either t_{CO} for $\overline{CE}$ or t_{OE} for $\overline{OE}$, rather than address access.

RAM WRITE MODE

The DS1251 is in the write mode whenever the $\overline{WE}$ and $\overline{CE}$ signals are in the active (low) state after address inputs are stable. The latter occurring falling edge of $\overline{CE}$ or $\overline{WE}$ will determine the start of the write cycle. The write cycle is terminated by the earlier rising edge of $\overline{CE}$ or $\overline{WE}$. All address inputs must

be kept valid throughout the write cycle. $\overline{WE}$ must return to the high state for a minimum recovery time (t_{WR}) before another cycle can be initiated. The $\overline{OE}$ control signal should be kept inactive (high) during write cycles to avoid bus contention. However, if the output bus has been enabled ($\overline{CE}$ and $\overline{OE}$ active) then $\overline{WE}$ will disable the outputs in t_{ODW} from its falling edge.

DATA RETENTION MODE

The 5V device is fully accessible and data can be written or read only when V_{CC} is greater than V_{PF}. However, when V_{CC} is below the power-fail point, V_{PF} (point at which write protection occurs), the internal clock registers and SRAM are blocked from any access. When V_{CC} falls below the battery switch point, V_{SO} (battery supply level), device power is switched from the V_{CC} pin to the backup battery. RTC operation and SRAM data are maintained from the battery until V_{CC} is returned to nominal levels.

The 3.3V device is fully accessible and data can be written or read only when V_{CC} is greater than V_{PF}. When V_{CC} falls below the power-fail point, V_{PF}, access to the device is inhibited. If V_{PF} is less than V_{BAT}, the device power is switched from V_{CC} to the backup supply (V_{BAT}) when V_{CC} drops below V_{PF}. If V_{PF} is greater than V_{BAT}, the device power is switched from V_{CC} to the backup supply (V_{BAT}) when V_{CC} drops below V_{BAT}. RTC operation and SRAM data are maintained from the battery until V_{CC} is returned to nominal levels.

All control, data, and address signals must be powered down when V_{CC} is powered down.

PHANTOM CLOCK OPERATION

Communication with the phantom clock is established by pattern recognition on a serial bit stream of 64 bits, which must be matched by executing 64 consecutive write cycles containing the proper data on DQ0. All accesses that occur prior to recognition of the 64-bit pattern are directed to memory.

After recognition is established, the next 64 read or write cycles either extract or update data in the phantom clock, and memory access is inhibited.

Data transfer to and from the timekeeping function is accomplished with a serial bit stream under control of chip enable, output enable, and write enable. Initially, a read cycle to any memory location using the $\overline{CE}$ and $\overline{OE}$ control of the phantom clock starts the pattern recognition sequence by moving a pointer to the first bit of the 64-bit comparison register. Next, 64 consecutive write cycles are executed using the $\overline{CE}$ and $\overline{WE}$ control of the SmartWatch. These 64 write cycles are used only to gain access to the phantom clock. Therefore, any address to the memory in the socket is acceptable. However, the write cycles generated to gain access to the phantom clock are also writing data to a location in the mated RAM. The preferred way to manage this requirement is to set aside just one address location in RAM as a phantom clock scratch pad. When the first write cycle is executed, it is compared to bit 0 of the 64-bit comparison register. If a match is found, the pointer increments to the next location of the comparison register and awaits the next write cycle. If a match is not found, the pointer does not advance and all subsequent write cycles are ignored. If a read cycle occurs at any time during pattern recognition, the present sequence is aborted and the comparison register pointer is reset. Pattern recognition continues for a total of 64 write cycles as described above until all the bits in the comparison register have been matched (Figure 1). With a correct match for 64 bits, the phantom clock is enabled and data transfer to or

from the timekeeping registers can proceed. The next 64 cycles will cause the phantom clock to either receive or transmit data on DQ0, depending on the level of the $\overline{OE}$ pin or the $\overline{WE}$ pin. Cycles to other locations outside the memory block can be interleaved with $\overline{CE}$ cycles without interrupting the pattern recognition sequence or data transfer sequence to the phantom clock.

PHANTOM CLOCK REGISTER INFORMATION

The phantom clock information is contained in eight registers of 8 bits, each of which is sequentially accessed 1 bit at a time after the 64-bit pattern recognition sequence has been completed. When updating the phantom clock registers, each register must be handled in groups of 8 bits. Writing and reading individual bits within a register could produce erroneous results. These read/write registers are defined in Figure 2.

Data contained in the phantom clock register is in binary-coded decimal format (BCD). Reading and writing the registers is always accomplished by stepping through all eight registers, starting with bit 0 of register 0 and ending with bit 7 of register 7.

PHANTOM CLOCK REGISTER DEFINITION Figure 1

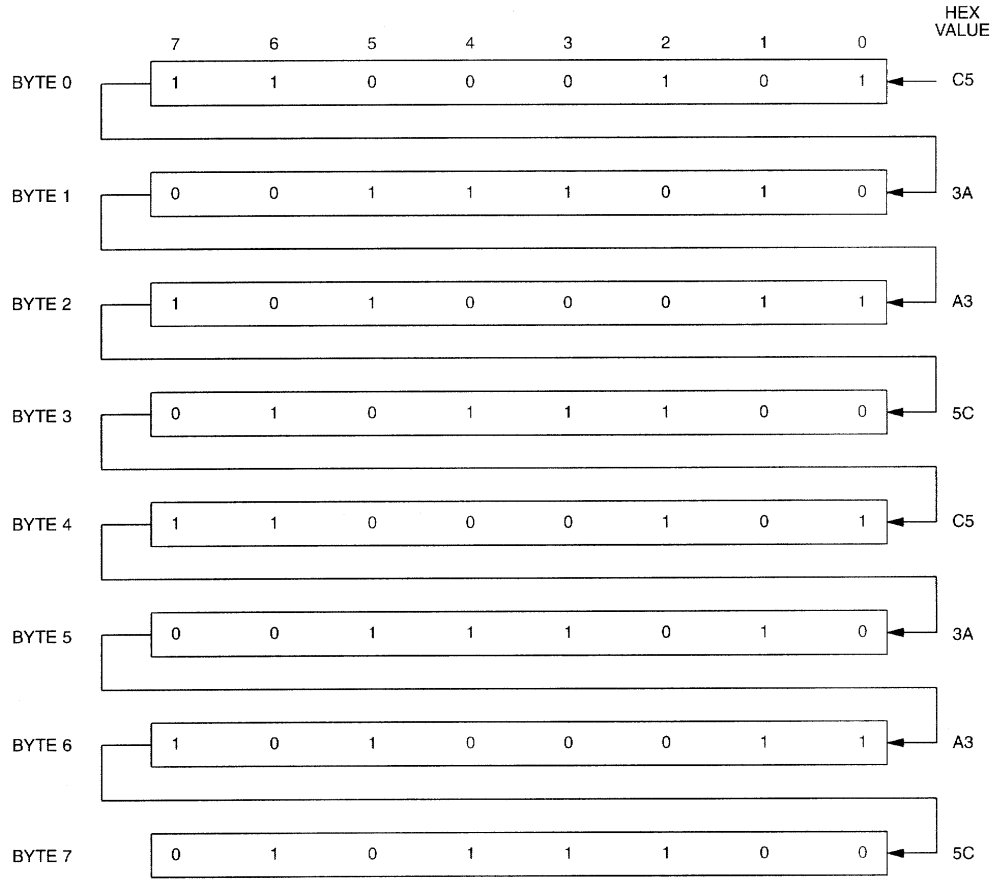

NOTE: THE PATTERN RECOGNITION IN HEX IS C5, 3A, A3, 5C, C5, 3A, A3, 5C. THE ODDS OF THIS PATTERN BEING ACCIDENTALLY DUPLICATED AND CAUSING INADVERTENT ENTRY TO THE PHANTOM CLOCK IS LESS THAN 1 IN 10^{19}. THIS PATTERN IS SENT TO THE PHANTOM CLOCK LSB TO MSB.

PHANTOM CLOCK REGISTER DEFINITION Figure 2

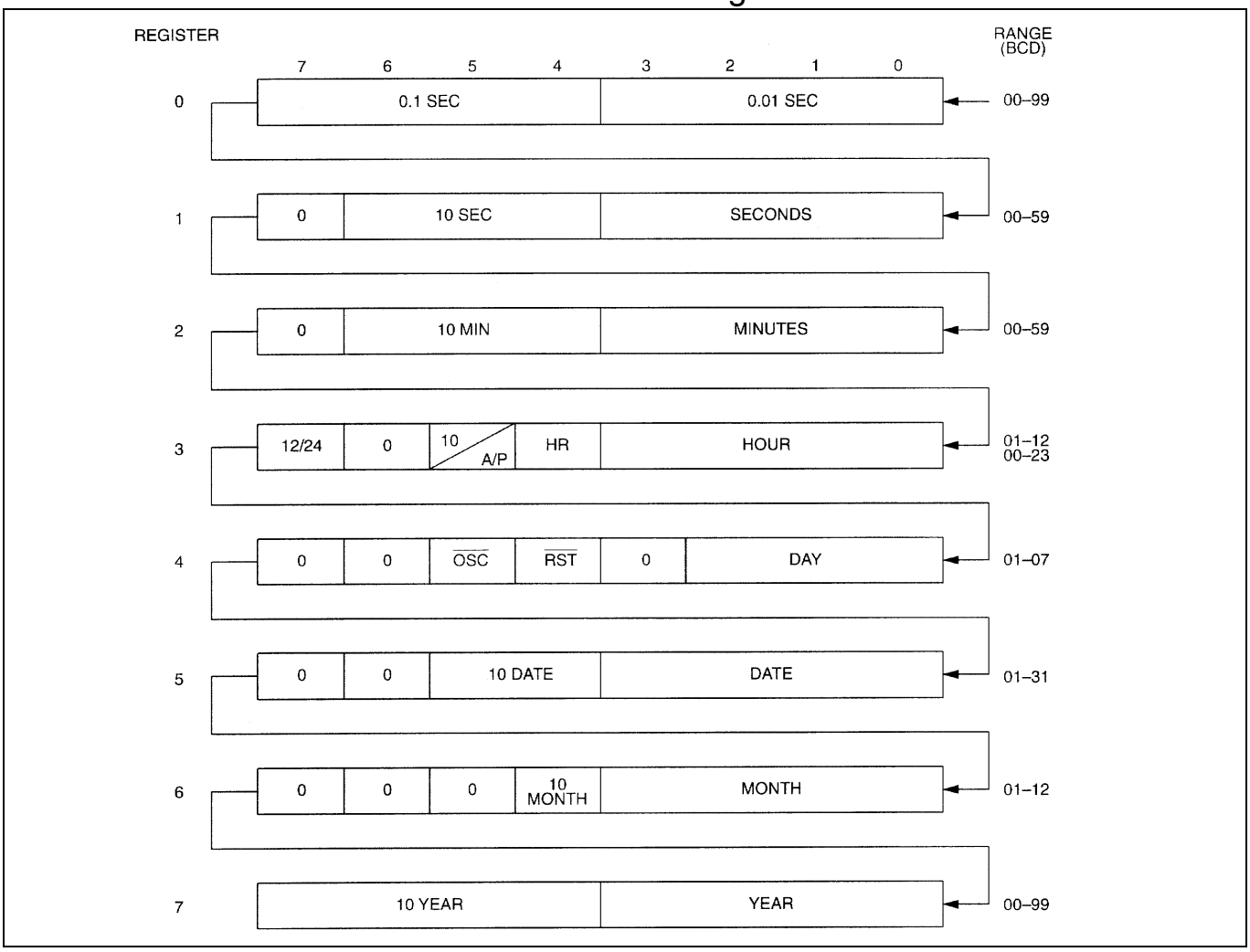

AM/PM/12/24 MODE

Bit 7 of the hours register is defined as the 12-hour or 24-hour mode-select bit. When high, the 12-hour mode is selected. In the 12-hour mode, bit 5 is the AM/PM bit with logic high being PM. In the 24-hour mode, bit 5 is the 20-hour bit (20–23 hours).

OSCILLATOR AND RESET BITS

Bits 4 and 5 of the day register are used to control the $\overline{RST}$ and oscillator functions. Bit 4 controls the $\overline{RST}$ (pin 1). When the $\overline{RST}$ bit is set to logic 1, the $\overline{RST}$ input pin is ignored. When the $\overline{RST}$ bit is set to logic 0, a low input on the $\overline{RST}$ pin will cause the phantom clock to abort data transfer without changing data in the watch registers. Bit 5 controls the oscillator. When set to logic 1, the oscillator is off. When set to logic 0, the oscillator turns on and the watch becomes operational. These bits are shipped from the factory set to a logic 1.

ZERO BITS

Registers 1, 2, 3, 4, 5, and 6 contain one or more bits, which will always read logic 0. When writing these locations, either a logic 1 or 0 is acceptable.

BATTERY LONGEVITY

The DS1251 has a lithium power source that is designed to provide energy for clock activity, and clock and RAM data retention when the V_{CC} supply is not present. The capability of this internal power supply is sufficient to power the DS1251 continuously for the life of the equipment in which it is installed. For specification purposes, the life expectancy is 10 years at +25°C with the internal clock oscillator running in the absence of V_{CC} power. Each DS1251 is shipped from Maxim with its lithium energy source disconnected, guaranteeing full energy capacity. When V_{CC} is first applied at a level greater than V_{PF}, the lithium energy source is enabled for battery-backup operation. Actual life expectancy of the DS1251 will be much longer than 10 years since no lithium battery energy is consumed when V_{CC} is present.

CLOCK ACCURACY (DIP MODULE)

The DS1251 is guaranteed to keep time accuracy to within ±1 minute per month at +25°C. The clock is calibrated at the factory by Maxim using special calibration nonvolatile tuning elements. The DS1251 does not require additional calibration and temperature deviations will have a negligible effect in most applications. For this reason, methods of field clock calibration are not available and not necessary.

CLOCK ACCURACY (POWERCAP MODULE)

The DS1251P and DS9034PCX are each individually tested for accuracy. Once mounted together, the module is guaranteed to keep time accuracy to within ±1.53 minutes per month (35ppm) at +25°C.

ABSOLUTE MAXIMUM RATINGS

Voltage Range on Any Pin Relative to Ground (5V product) . . . . . -0.3V to +6.0V
(3.3V product) . . . . . -0.3V to +4.6V

Storage Temperature Range
EDIP . . . . . .-40°C to +85°C
PowerCap . . . . . -55°C to +125°C

Lead Temperature (soldering, 10s) . . . . . +260°C
Note: EDIP is wave or hand-soldered only

Soldering Temperature (reflow, PowerCap) . . . . . .+260°C

This is a stress rating only and functional operation of the device at these or any other conditions beyond those indicated in the operation sections of this specification is not implied. Exposure to absolute maximum rating conditions for extended periods of time can affect reliability.

OPERATING RANGE

RANGE	TEMP RANGE (NONCONDENSING)	V_{CC} (V)
Commercial	0°C to +70°C	3.3 ±10% or 5 ±10%
Industrial	-40°C to +85°C	3.3 ±10% or 5 ±10%

RECOMMENDED OPERATING CONDITIONS

(T_A = Over the operating range.)

PARAMETER		SYMBOL	MIN	TYP	MAX	UNITS	NOTES
Logic 1 Voltage All Inputs	V_{CC} = 5V ±10%	V_{IH}	2.2		V_{CC} + 0.3	V	11
	V_{CC} = 3.3V ±10%		2.0		V_{CC} + 0.3		
Logic 0 Voltage All Inputs	V_{CC} = 5V ±10%	V_{IL}	-0.3		+0.8	V	11
	V_{CC} = 3.3V ±10%		-0.3		+0.6		

DC ELECTRICAL CHARACTERISTICS

(T_A = Over the operating range.) (5V)

PARAMETER	SYMBOL	MIN	TYP	MAX	UNITS	NOTES
Input Leakage Current	I_{IL}	-1.0		+1.0	µA	12
I/O Leakage Current $\overline{CE} \geq V_{IH} \leq V_{CC}$	I_{IO}	-1.0		+1.0	µA	
Output Current at 2.4V	I_{OH}	-1.0			mA	
Output Current at 0.4V	I_{OL}	2.0			mA	
Standby Current $\overline{CE}$ = 2.2V	I_{CCS1}		5	10	mA	
Standby Current $\overline{CE} = V_{CC}$ - 0.5V	I_{CCS2}		3.0	5.0	mA	
Operating Current t_{CYC} = 70ns	I_{CC01}			85	mA	
Write Protection Voltage	V_{PF}	4.25	4.37	4.50	V	11
Battery Switchover Voltage	V_{SO}		V_{BAT}		V	11

DC ELECTRICAL CHARACTERISTICS

(T_A = Over the operating range.) (3.3V)

PARAMETER	SYMBOL	MIN	TYP	MAX	UNITS	NOTES
Input Leakage Current	I_{IL}	-1.0		+1.0	µA	12
I/O Leakage Current $\overline{CE} \geq V_{IH} \leq V_{CC}$	I_{IO}	-1.0		+1.0	µA	
Output Current at 2.4V	I_{OH}	-1.0			mA	
Output Current at 0.4V	I_{OL}	2.0			mA	
Standby Current $\overline{CE}$ = 2.2V	I_{CCS1}		5	7	mA	
Standby Current $\overline{CE} = V_{CC}$ - 0.5V	I_{CCS2}		2.0	3.0	mA	
Operating Current t_{CYC} = 70ns	I_{CC01}			50	mA	
Write Protection Voltage	V_{PF}	2.80		2.97	V	11
Battery Switchover Voltage	V_{SO}		V_{BAT} or V_{PF}		V	11

CAPACITANCE

(T_A = +25°C)

PARAMETER	SYMBOL	MIN	TYP	MAX	UNITS	NOTES
Input Capacitance	C_{IN}		5	10	pF	
Input/Output Capacitance	$C_{I/O}$		5	10	pF	

MEMORY AC ELECTRICAL CHARACTERISTICS

(T_A = Over the operating range.) (5V)

PARAMETER	SYMBOL	DS1251Y-70		UNITS	NOTES
		MIN	MAX		
Read Cycle Time	t_{RC}	70		ns	
Access Time	t_{ACC}		70	ns	
$\overline{OE}$ to Output Valid	t_{OE}		35	ns	
$\overline{CE}$ to Output Valid	t_{CO}		70	ns	
$\overline{OE}$ or $\overline{CE}$ to Output Active	t_{COE}	5		ns	5
Output High-Z from Deselection	t_{OD}		25	ns	5
Output Hold from Address Change	t_{OH}	5		ns	
Write Cycle Time	t_{WC}	70		ns	
Write Pulse Width	t_{WP}	50		ns	3
Address Setup Time	t_{AW}	0		ns	
Write Recovery Time	t_{WR}	0		ns	
Output High-Z from $\overline{WE}$	t_{ODW}		25	ns	5
Output Active from $\overline{WE}$	t_{OEW}	5		ns	5
Data Setup Time	t_{DS}	30		ns	4
Data Hold Time from $\overline{WE}$	t_{DH}	5		ns	4

PHANTOM CLOCK AC ELECTRICAL CHARACTERISTICS

(T_A = Over the operating range.) (5V)

PARAMETER	SYMBOL	MIN	TYP	MAX	UNITS	NOTES
Read Cycle Time	t_{RC}	65			ns	
$\overline{CE}$ Access Time	t_{CO}			55	ns	
$\overline{OE}$ Access Time	t_{OE}			55	ns	
$\overline{CE}$ to Output Low-Z	t_{COE}	5			ns	
$\overline{OE}$ to Output Low-Z	t_{OEE}	5			ns	
$\overline{CE}$ to Output High-Z	t_{OD}			25	ns	5
$\overline{OE}$ to Output High-Z	t_{ODO}			25	ns	5
Read Recovery	t_{RR}	10			ns	
Write Cycle Time	t_{WC}	65			ns	
Write Pulse Width	t_{WP}	55			ns	3
Write Recovery	t_{WR}	10			ns	10
Data Setup Time	t_{DS}	30			ns	4
Data Hold Time	t_{DH}	0			ns	4
$\overline{CE}$ Pulse Width	t_{CW}	60			ns	
$\overline{RST}$ Pulse Width	t_{RST}	65			ns	

POWER-DOWN/POWER-UP TIMING

(T_A = Over the operating range.) (3.3V)

PARAMETER	SYMBOL	MIN	TYP	MAX	UNITS	NOTES
$\overline{CE}$ at V_{IH} before Power-Down	t_{PD}	0			µs	
V_{CC} Slew from $V_{PF(MAX)}$ to $V_{PF(MIN)}$($\overline{CE}$ at V_{PF})	t_F	300			µs	
V_{CC} Slew from $V_{PF(MIN)}$ to V_{SO}	t_{FB}	10			µs	
V_{CC} Slew from $V_{PF(MAX)}$ to $V_{PF(MIN)}$ ($\overline{CE}$ at V_{PF})	t_R	0			µs	
$\overline{CE}$ at V_{IH} after Power-Up	t_{REC}	1.5		2.5	ms	

(T_A = +25°C)

PARAMETER	SYMBOL	MIN	TYP	MAX	UNITS	NOTES
Expected Data Retention Time	t_{DR}	10			years	9

Warning: Under no circumstances are negative undershoots of any amplitude allowed when device is in battery-backup mode.

MEMORY AC ELECTRICAL CHARACTERISTICS

(T_A = Over the operating range.) (3.3V)

PARAMETER	SYMBOL	DS1251W-120		UNITS	NOTES
		MIN	MAX		
Read Cycle Time	t_{RC}	120		ns	
Access Time	t_{ACC}		120	ns	
$\overline{OE}$ to Output Valid	t_{OE}		60	ns	
$\overline{CE}$ to Output Valid	t_{CO}		120	ns	
$\overline{OE}$ or $\overline{CE}$ to Output Active	t_{COE}	5		ns	5
Output High-Z from Deselection	t_{OD}		40	ns	5
Output Hold from Address Change	t_{OH}	5		ns	
Write Cycle Time	t_{WC}	120		ns	
Write Pulse Width	t_{WP}	90		ns	3
Address Setup Time	t_{AW}	0		ns	
Write Recovery Time	t_{WR}	20		ns	10
Output High-Z from $\overline{WE}$	t_{ODW}		40	ns	5
Output Active from $\overline{WE}$	t_{OEW}	5		ns	5
Data Setup Time	t_{DS}	50		ns	4
Data Hold Time from $\overline{WE}$	t_{DH}	20		ns	4

PHANTOM CLOCK AC ELECTRICAL CHARACTERISTICS

(T_A = Over the operating range.) (3.3V)

PARAMETER	SYMBOL	MIN	TYP	MAX	UNITS	NOTES
Read Cycle Time	t_{RC}	120			ns	
$\overline{CE}$ Access Time	t_{CO}			100	ns	
$\overline{OE}$ Access Time	t_{OE}			100	ns	
$\overline{CE}$ to Output Low-Z	t_{COE}	5			ns	
$\overline{OE}$ to Output Low-Z	t_{OEE}	5			ns	
$\overline{CE}$ to Output High-Z	t_{OD}			40	ns	5
$\overline{OE}$ to Output High-Z	t_{ODO}			40	ns	5
Read Recovery	t_{RR}	20			ns	
Write Cycle Time	t_{WC}	120			ns	
Write Pulse Width	t_{WP}	100			ns	3
Write Recovery	t_{WR}	20			ns	10
Data Setup Time	t_{DS}	45			ns	4
Data Hold Time	t_{DH}	0			ns	4
$\overline{CE}$ Pulse Width	t_{CW}	105			ns	
$\overline{RST}$ Pulse Width	t_{RST}	120			ns	

POWER-DOWN/POWER-UP TIMING

(T_A = Over the operating range.) (3.3V)

PARAMETER	SYMBOL	MIN	TYP	MAX	UNITS	NOTES
$\overline{CE}$ at V_{IH} before Power-Down	t_{PD}	0			µs	
V_{CC} Slew from $V_{PF(MAX)}$ to $V_{PF(MIN)}$ ($\overline{CE}$ at V_{IH})	t_F	300			µs	
V_{CC} Slew from $V_{PF(MAX)}$ to $V_{PF(MIN)}$ ($\overline{CE}$ at V_{IH})	t_R	0			µs	
$\overline{CE}$ at V_{IH} after Power-Up	t_{REC}	1.5		2.5	ms	

(T_A = +25°C)

PARAMETER	SYMBOL	MIN	TYP	MAX	UNITS	NOTES
Expected Data Retention Time	t_{DR}	10			years	9

Warning: Under no circumstances are negative undershoots of any amplitude allowed when device is in battery-backup mode.

MEMORY READ CYCLE (Note 1)

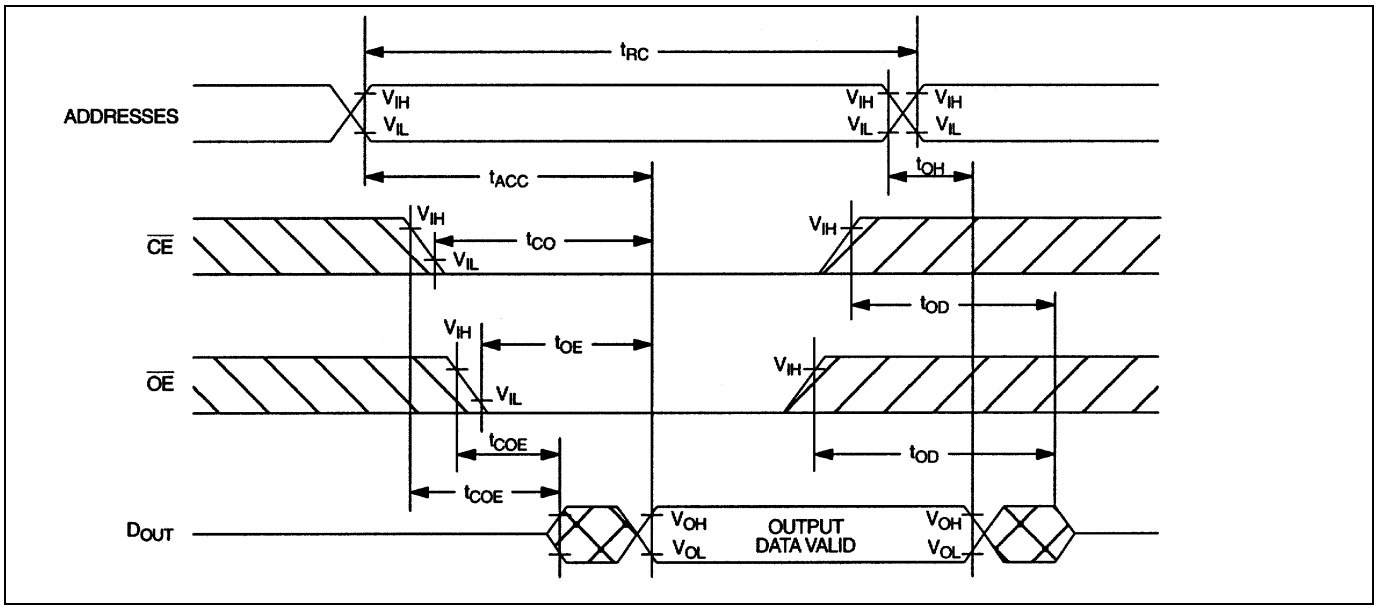

MEMORY WRITE CYCLE 1 (Notes 2, 6, and 7)

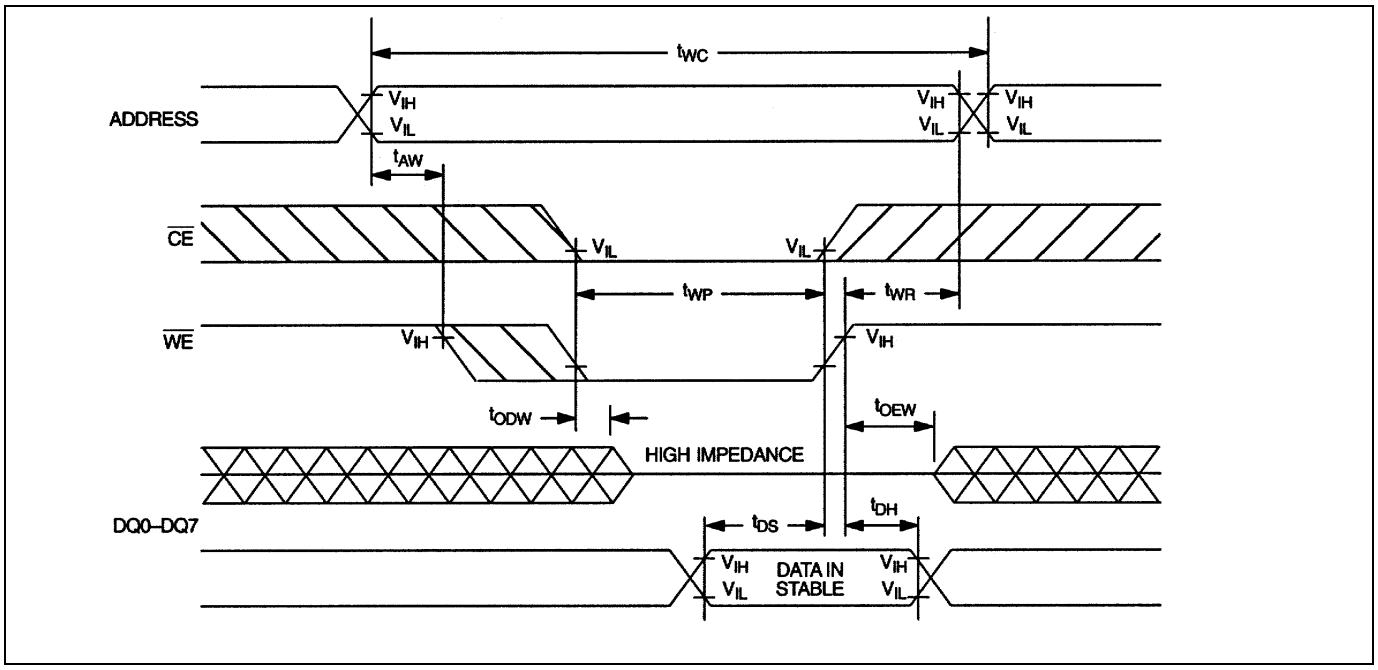

MEMORY WRITE CYCLE 2 (Notes 2 and 8)

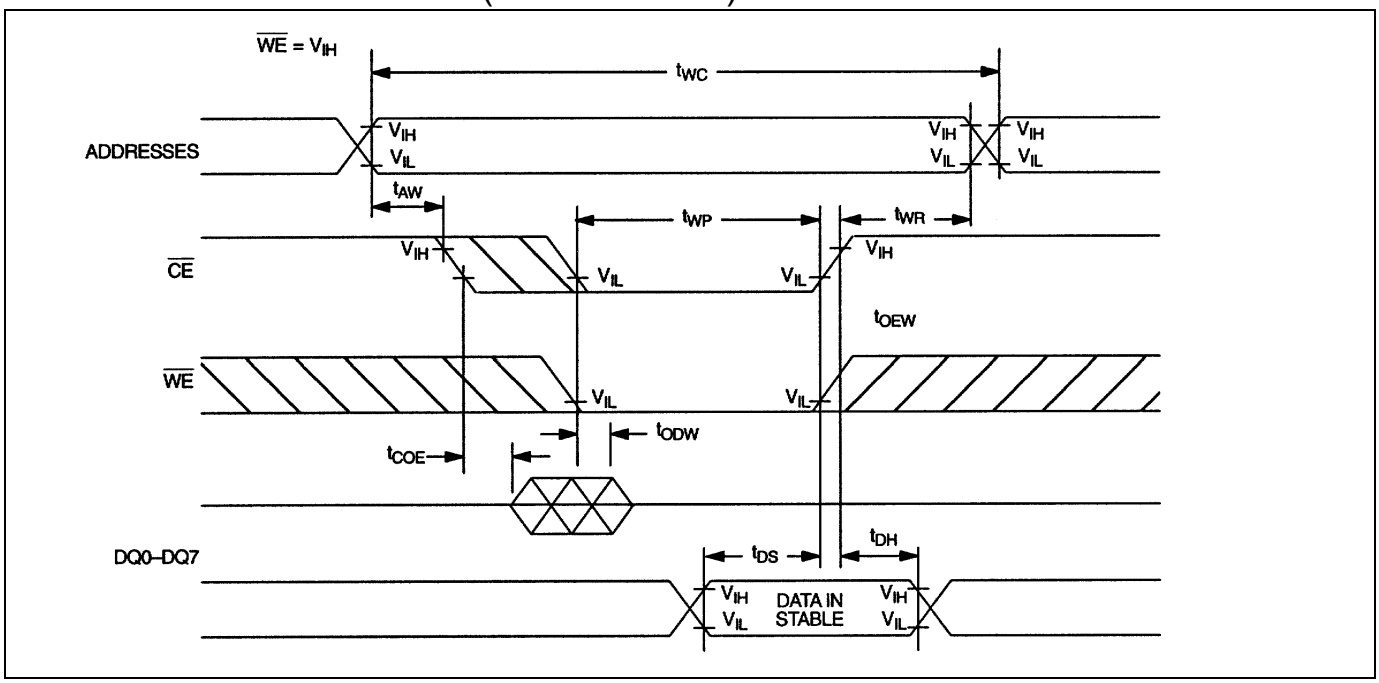

RESET FOR PHANTOM CLOCK

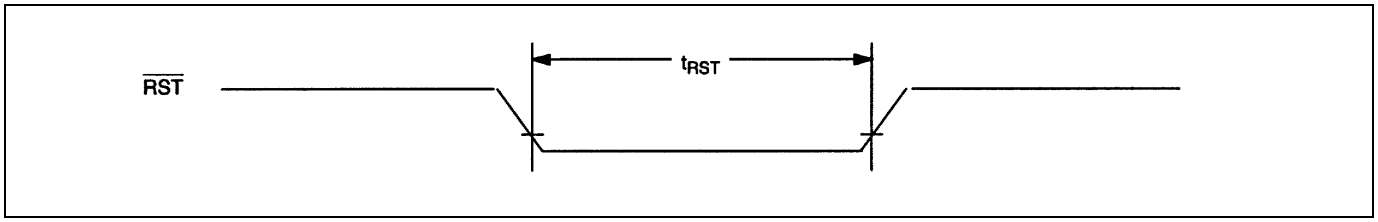

READ CYCLE TO PHANTOM CLOCK

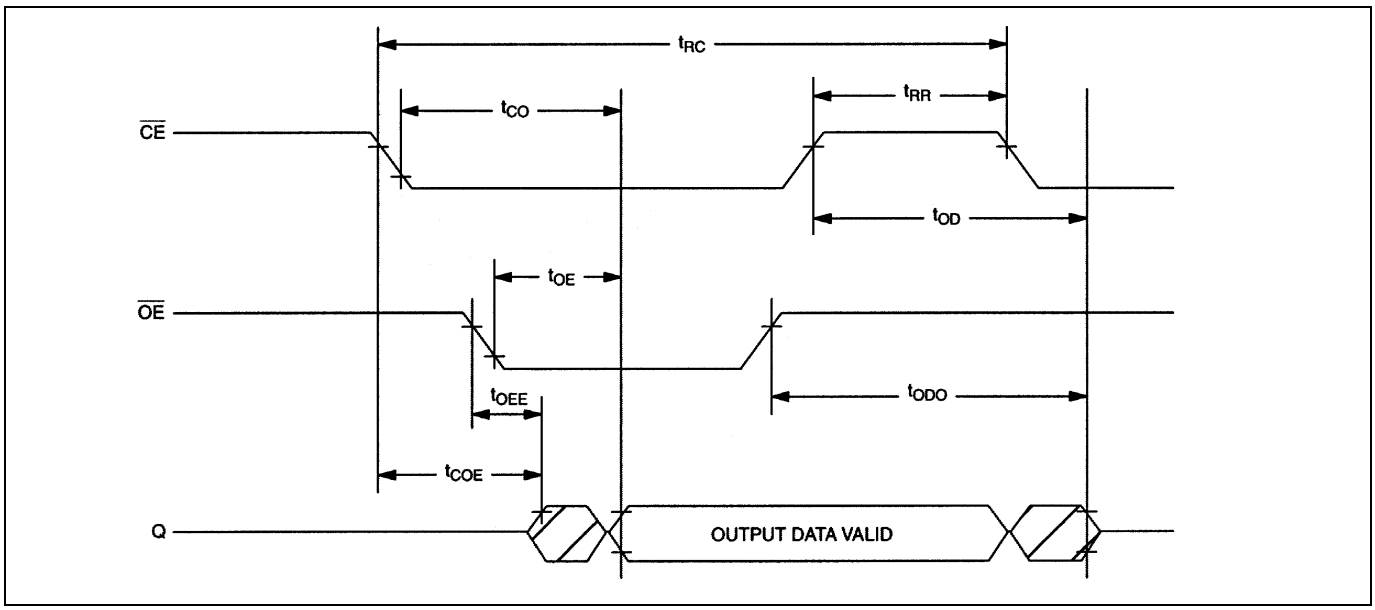

WRITE CYCLE TO PHANTOM CLOCK

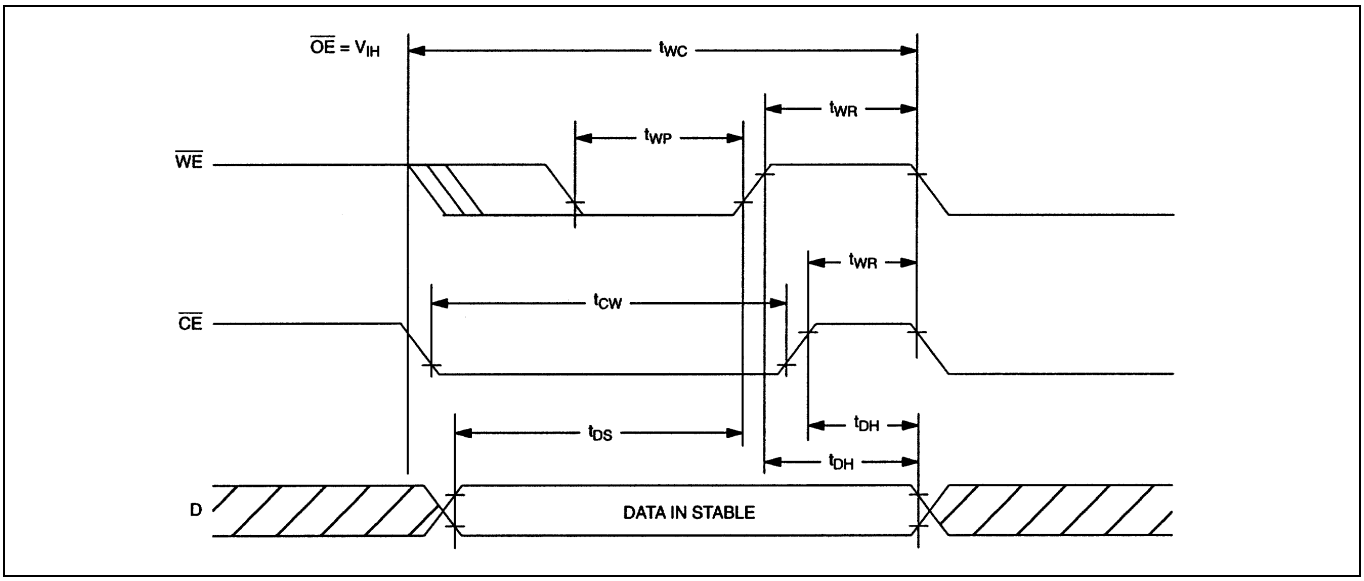

POWER-DOWN/POWER-UP CONDITION (5V)

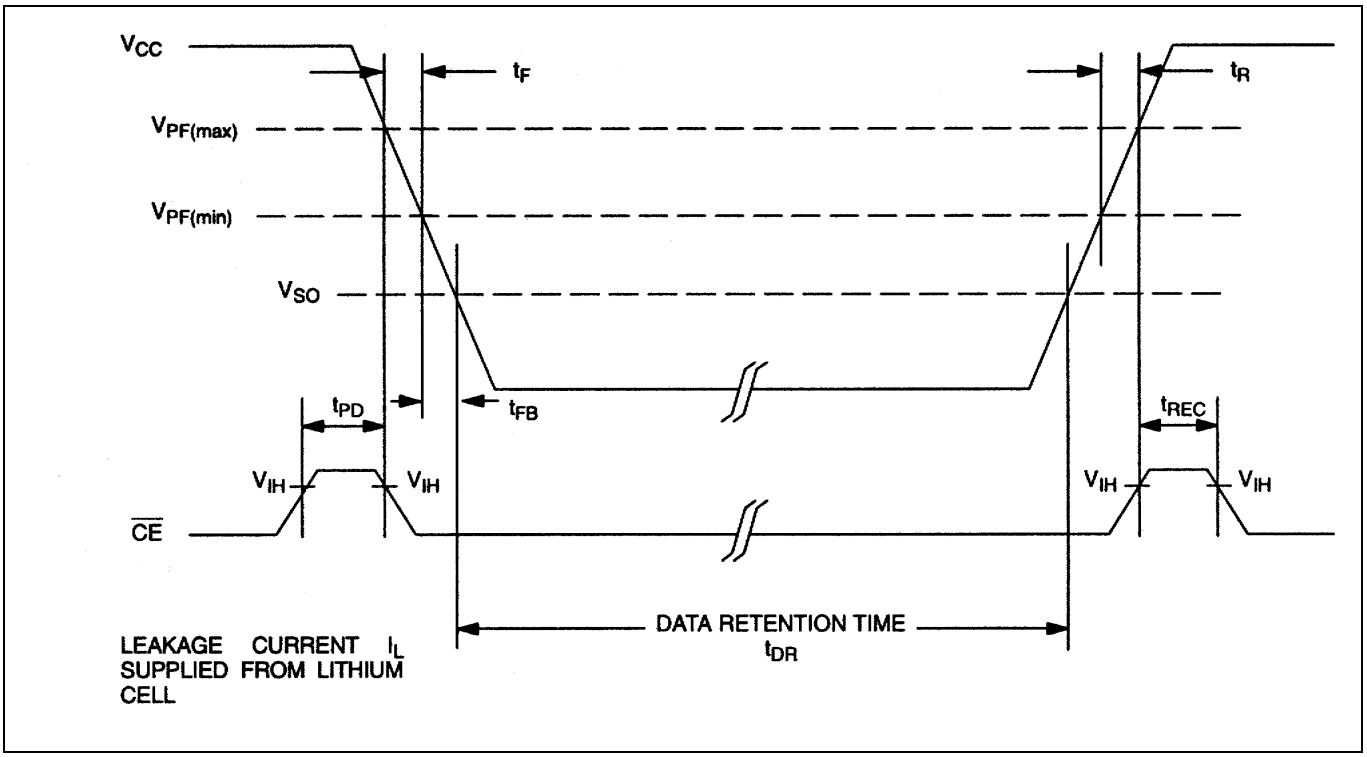

POWER-DOWN/POWER-UP CONDITION (3.3V)

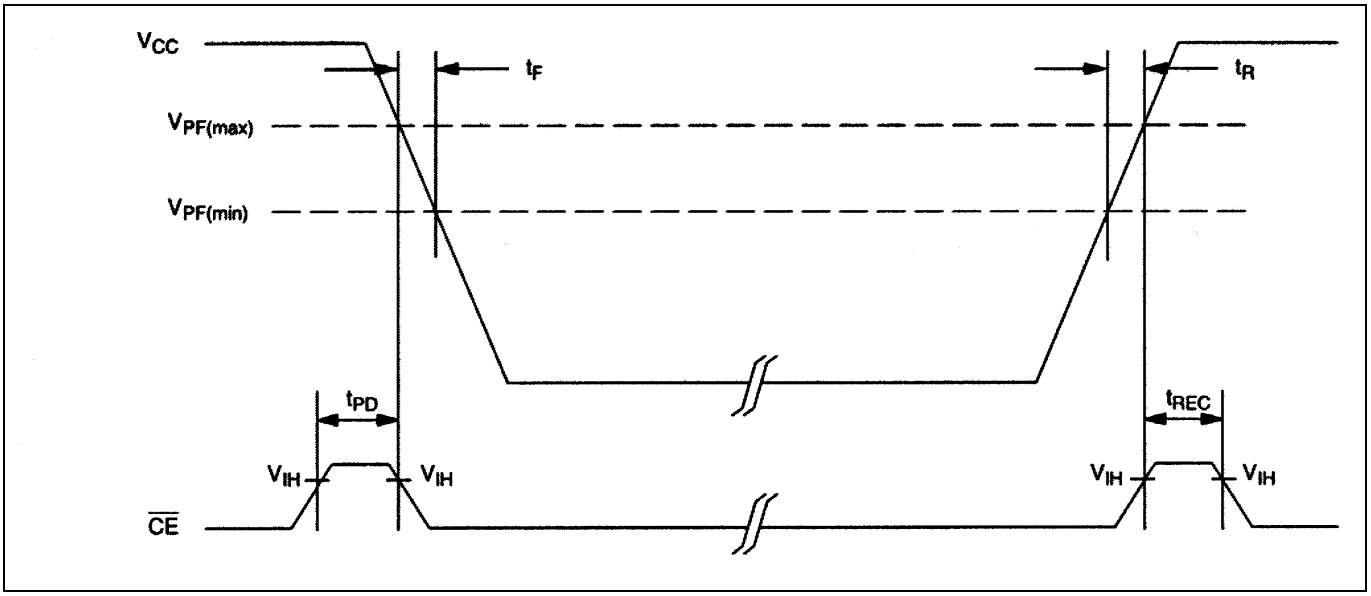

AC TEST CONDITIONS

Output Load: 50pF + 1TTL Gate
Input Pulse Levels: 0 to 3V

Timing Measurement Reference Levels
Input: 1.5V
Output: 1.5V
Input Pulse Rise and Fall Times: 5ns

NOTES:

1) $\overline{WE}$ is high for a read cycle.
2) $\overline{OE} = V_{IH}$ or V_{IL}. If $\overline{OE} = V_{IH}$ during write cycle, the output buffers remain in a high-impedance state.
3) t_{WP} is specified as the logical AND of $\overline{CE}$ and $\overline{WE}$. t_{WP} is measured from the latter of $\overline{CE}$ or $\overline{WE}$ going low to the earlier of $\overline{CE}$ or $\overline{WE}$ going high.
4) t_{DH}, t_{DS} are measured from the earlier of $\overline{CE}$ or $\overline{WE}$ going high.
5) These parameters are sampled with a 50pF load and are not 100% tested.
6) If the $\overline{CE}$ low transition occurs simultaneously with or later than the $\overline{WE}$ low transition in Write Cycle 1, the output buffers remain in a high-impedance state during this period.
7) If the $\overline{CE}$ high transition occurs prior to or simultaneously with the $\overline{WE}$ high transition, the output buffers remain in a high-impedance state during this period.
8) If WE is low or the $\overline{WE}$ low transition occurs prior to or simultaneously with the $\overline{CE}$ low transition, the output buffers remain in a high impedance state during this period.
9) The expected t_{DR} is defined as cumulative time in the absence of V_{CC} with the clock oscillator running.
10) t_{WR} is a function of the latter occurring edge of $\overline{WE}$ or $\overline{CE}$.
11) Voltages are referenced to ground.
12) $\overline{RST}$ (Pin 1) has an internal pullup resistor.
13) Real-time clock modules can be successfully processed through conventional wave-soldering techniques as long as temperature exposure to the lithium energy source contained within does not exceed +85°C. Post-solder cleaning with water-washing techniques is acceptable, provided that ultrasonic vibration is not used.

In addition, for the PowerCap:

1) Maxim recommends that PowerCap Module bases experience one pass through solder reflow oriented with the label side up (“live-bug”).
2) Hand soldering and touch-up: Do not touch or apply the soldering iron to leads for more than three seconds.
   - To solder, apply flux to the pad, heat the lead frame pad, and apply solder. To remove the part, apply flux, heat the lead frame pad until the solder reflows, and use a solder wick to remove solder.

PACKAGE INFORMATION

For the latest package outline information and land patterns (footprints), go to **www.maxim-ic.com/packages**. Note that a "+", "#", or "-" in the package code indicates RoHS status only. Package drawings may show a different suffix character, but the drawing pertains to the package regardless of RoHS status.

PACKAGE TYPE	PACKAGE CODE	OUTLINE NO.	LAND PATTERN NO.
32 EDIP	MDT32+5	21-0245	—
34 PWRCP	PC2+5	21-0246	—

REVISION HISTORY

REVISION DATE	DESCRIPTION	PAGES CHANGED
11/11	Updated the *Features*, *Ordering Information*, *AM/PM/12/24-MODE*, and *Absolute Maximum Ratings*, and *Package Information* sections	1, 2, 6, 8, 19

Maxim cannot assume responsibility for use of any circuitry other than circuitry entirely embodied in a Maxim product. No circuit patent licenses are implied. Maxim reserves the right to change the circuitry and specifications without notice at any time.

Maxim Integrated Products, 120 San Gabriel Drive, Sunnyvale, CA 94086 408-737-7600

© 2011 Maxim Integrated Products Maxim is a registered trademark of Maxim Integrated Products, Inc.

Looking for pricing, stock, or lifecycle information?

Click below to explore more details on WIN SOURCE:

- View DS1251W-120 on WIN SOURCE
- Maxim Integrated Information

Optimize Your Supply Chain with WIN SOURCE Solutions

- Global Sourcing Solution
- Obsolete Management
- Cost Control Management
- Shortage Management
- Alternative Solution
- Excess Inventory Management