THE DATASHEET OF

086212033340800A+

www.win-source.net 0086-755-83957316

KYOCERA

0.5mm Pitch

SERIES

6212/6262

0.5mmピッチ RA SMT 上接点 スライドロック
0.5mmPitch RA SMT Top contact Slide lock

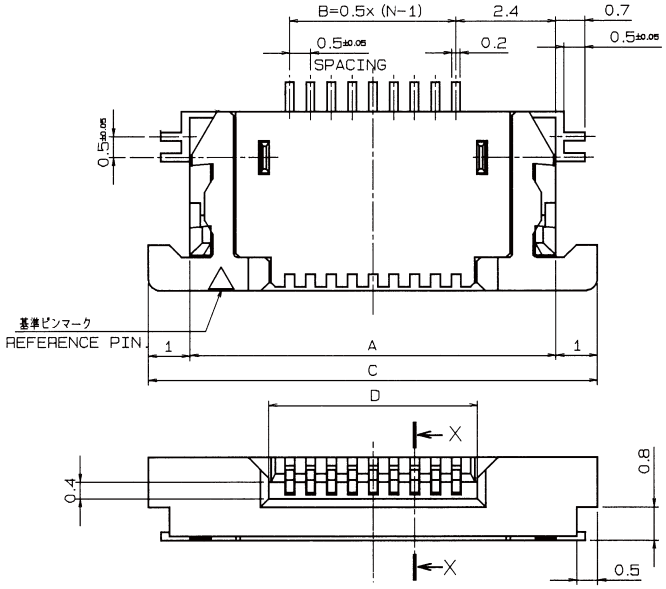

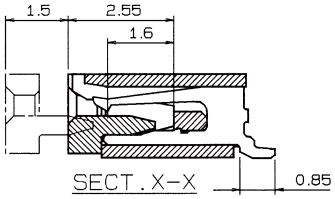

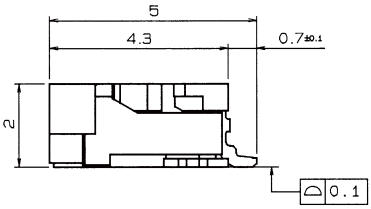

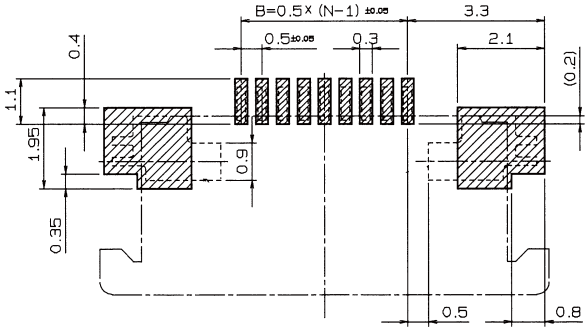

推奨基板取付寸法（コネクタ搭載側）
MOUNTING LAYOUT (CONN. MOUNTING SIDE)

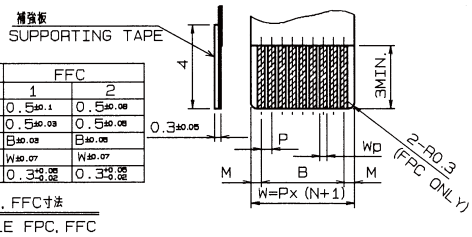

	FPC		FFC	
	1	2	1	2
M	0.5±0.12	0.5±0.1	0.5±0.1	0.5±0.08
P	0.5±0.02	0.5±0.05	0.5±0.03	0.5±0.08
B	B±0.03	B±0.05	B±0.03	B±0.05
W	W±0.07	W±0.07	W±0.07	W±0.07
Wp	0.35 +0.04 −0.03	0.35±0.05	0.3 +0.05 −0.02	0.3 +0.05 −0.02

適用FPC, FFC寸法
APPLICABLE FPC, FFC

極数 NO.OF.POS	A	B	C	D
5	6.8	2.0	8.8	3.1
6	7.3	2.5	9.3	3.6
7	7.8	3.0	9.8	4.1
8	8.3	3.5	10.3	4.6
9	8.8	4.0	10.8	5.1
10	9.3	4.5	11.3	5.6
11	9.8	5.0	11.8	6.1
12	10.3	5.5	12.3	6.6
13	10.8	6.0	12.8	7.1
14	11.3	6.5	13.3	7.6
15	11.8	7.0	13.8	8.1
16	12.3	7.5	14.3	8.6
17	12.8	8.0	14.8	9.1
18	13.3	8.5	15.3	9.6
19	13.8	9.0	15.8	10.1
20	14.3	9.5	16.3	10.6
21	14.8	10.0	16.8	11.1
22	15.3	10.5	17.3	11.6
23	15.8	11.0	17.8	12.1
24	16.3	11.5	18.3	12.6
25	16.8	12.0	18.8	13.1
26	17.3	12.5	19.3	13.6
27	17.8	13.0	19.8	14.1
28	18.3	13.5	20.3	14.6
29	18.8	14.0	20.8	15.1
30	19.3	14.5	21.3	15.6
32	20.3	15.5	22.3	16.6
33	19.8	16.0	22.8	17.1
34	21.3	16.5	23.3	17.6
35	21.8	17.0	23.8	18.1
36	22.3	17.5	24.3	18.6
38	23.3	18.5	25.3	19.6
40	24.3	19.5	26.3	20.6

注文コード ORDERING CODE

08 6212 0XX 340 800A+

RoHS 対応品
RoHS Compliant Product

スズ銅めっき Sn-Cu Plated

極数 NUMBER OF POSITIONS

注文コード ORDERING CODE

08 6262 0XX 340 846+

RoHS 対応品
RoHS Compliant Product

金めっき Au Plated

極数 NUMBER OF POSITIONS

生産対応可能極数については、営業部にご確認願います。
Feel free to contact our sales department for available numbers of positions.

KYOCERA

0.5mm Pitch

SERIES

6212/6262

エンボス梱包品

Tape and Reel Package

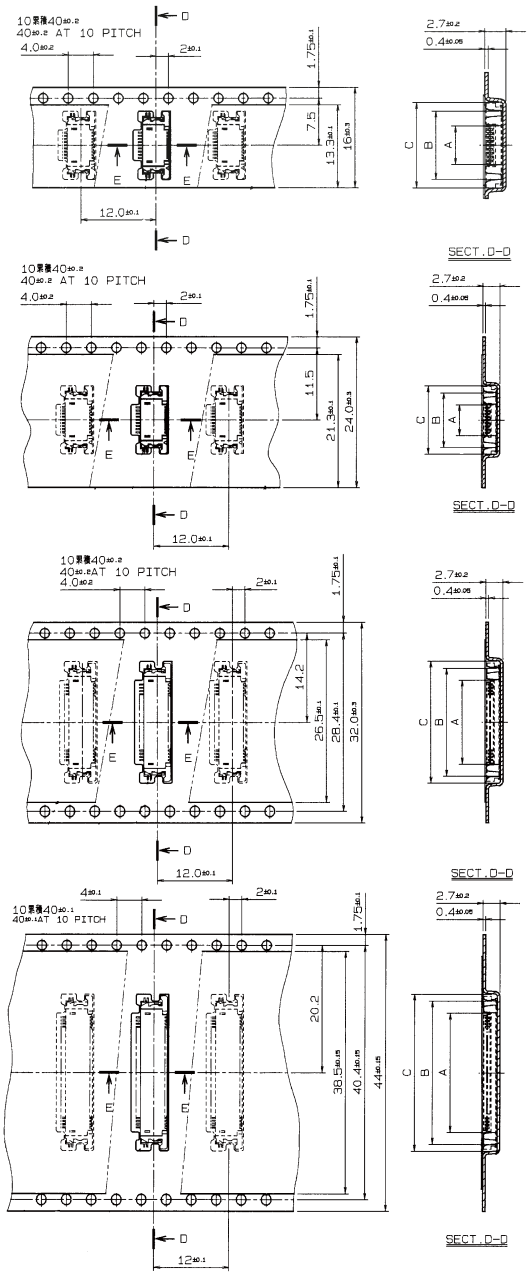

極数 NO.OF POS.	A	B	C
5	3.4	7.2	9.4
6	3.9	7.7	9.9

極数 NO.OF POS.	A	B	C
7	4.4	8.2	10.4
8	4.9	8.7	10.9
9	5.4	9.2	11.4
10	5.9	9.7	11.9
11	6.4	10.2	12.4
12	6.9	10.7	12.9
13	7.4	11.2	13.4
14	7.9	11.7	13.9
15	8.4	12.2	14.4
16	8.9	12.7	14.9
17	9.4	13.2	15.4
18	9.9	13.7	15.9
19	10.4	14.2	16.4
20	10.9	14.7	16.9
21	11.4	15.2	17.4
22	11.9	15.7	17.9
23	12.4	16.2	18.4
24	12.9	16.7	18.9

極数 NO.OF POS.	A	B	C
25	13.4	17.2	19.4
26	13.9	17.7	19.9
27	14.4	18.2	20.4
28	14.9	18.7	20.9
29	15.4	19.2	21.4
30	15.9	19.7	21.9

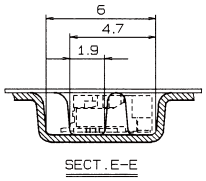

極数 NO.OF POS.	A	B	C
32	16.9	20.7	22.9
33	17.4	21.2	23.4
34	17.9	21.7	23.9
35	18.4	22.2	24.4
36	18.9	22.7	24.9
38	19.9	23.7	25.9
40	20.9	24.7	26.9

注文コード ORDERING CODE

08 6212 0XX 340 800A+

RoHS 対応品
RoHS Compliant Product

800A+ — スズ銅めっき Sn-Cu Plated

0XX — 極数 NUMBER OF POSITIONS

注文コード ORDERING CODE

08 6262 0XX 340 846+

RoHS 対応品
RoHS Compliant Product

846+ — 金めっき Au Plated

0XX — 極数 NUMBER OF POSITIONS

生産対応可能極数については、営業部にご確認願います。

Feel free to contact our sales department for available numbers of positions.

梱包数量 2000個/リール
PACKING QUANTITY：2000/Reel

Looking for pricing, stock, or lifecycle information?

Click below to explore more details on WIN SOURCE:

- View 086212033340800A+ on WIN SOURCE
- AVX Corp/Kyocera Corp Information

Optimize Your Supply Chain with WIN SOURCE Solutions

- Global Sourcing Solution
- Obsolete Management
- Cost Control Management
- Shortage Management
- Alternative Solution
- Excess Inventory Management