THE DATASHEET OF

AFB1224VHE

www.win-source.net 0086-755-83957316

DELTA ELECTRONICS, INC.
252, SHANG YING ROAD, KUEI SAN
TAOYUAN SHIEN 333, TAIWAN, R. O. C.
TEL : 886-(0)3-3591968
FAX : 886-(0)3-3591991

SPECIFICATION FOR APPROVAL

****

Customer:

Description: DC FAN

Customer P/N: REV:

Delta Model NO.: AFB1224VHE

Sample Rev: 00 Issue NO:

Sample Issue Date: JAN.28.2005. Quantity:

1. SCOPE:

THIS SPECIFICATION DEFINES THE ELECTRICAL AND MECHANICAL CHARACTERISTICS OF THE DC BRUSHLESS AXIAL FLOW FAN. THE FAN MOTOR IS WITH TWO PHASES AND FOUR POLES.

2. CHARACTERS:

ITEM	DESCRIPTION
RATED VOLTAGE	24 VDC
OPERATION VOLTAGE	7.0 - 27.6 VDC
INPUT CURRENT	0.38 (MAX. 0.57) A
INPUT POWER	9.12 (MAX. 13.68) W
SPEED	3200 R.P.M. (REF.)
MAX. AIR FLOW (AT ZERO STATIC PRESSURE)	3.680 (MIN. 3.390) M^3/MIN. 129.96 (MIN. 119.72) CFM
MAX. AIR PRESSURE (AT ZERO AIRFLOW)	10.70 (MIN. 9.06) mmH_2O 0.420 (MIN. 0.357) $inchH_2O$
ACOUSTICAL NOISE (AVG.)	48.0 (MAX. 51.0) dB-A
INSULATION TYPE	UL: CLASS A

(continued)

PART NO:

DELTA MODEL: AFB1224VHE

INSULATION STRENGTH	10 MEG OHM MIN. AT 500 VDC (BETWEEN FRAME AND (+) TERMINAL)
DIELECTRIC STRENGTH	5 mA MAX. AT 500 VAC 60 Hz ONE MINUTE, (BETWEEN FRAME AND (+) TERMINAL)
EXTERNAL COVER	OPEN TYPE
LIFE EXPECTANCE	70,000 HOURS CONTINUOUS OPERATION AT 40 °C WITH 15 ~ 65 %RH.
ROTATION	CLOCKWISE VIEW FROM NAME PLATE SIDE
OVER CURRENT SHUT DOWN	THE CURRENT WILL SHUT DOWN WHEN LOCKING ROTOR.
LEAD WIRE	UL 1007 -F- AWG #24 BLACK WIRE NEGATIVE(-) RED WIRE POSITIVE(+)

NOTES:
1. ALL READINGS ARE MEASURED AFTER STABLY WARMING UP THROUGH 10 MINUTES.
2. THE VALUES WRITTEN IN PARENS , ( ), ARE LIMITED SPEC.
3. ACOUSTICAL NOISE MEASURING CONDITION:

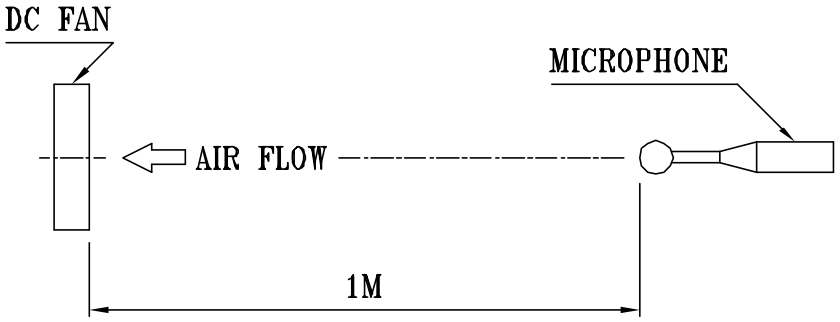

NOISE IS MEASURED AT RATED VOLTAGE IN FREE AIR IN ANECHOIC CHAMBER WITH B & K SOUND LEVEL METER WITH MICROPHONE AT A DISTANCE OF ONE METER FROM THE FAN INTAKE.

PART NO:

DELTA MODEL: AFB1224VHE

3. MECHANICAL:

3-1. DIMENSIONS ---------- SEE DIMENSIONS DRAWING

3-2. FRAME ---------- PLASTIC UL: 94V-0

3-3. IMPELLER ---------- PLASTIC UL: 94V-0

3-4. BEARING SYSTEM ---------- TWO BALL BEARINGS

3-5. WEIGHT ---------- 256 GRAMS

4. ENVIRONMENTAL:

4-1. OPERATING TEMPERATURE ---------- -10 TO +60 DEGREE C

4-2. STORAGE TEMPERATURE ---------- -40 TO +75 DEGREE C

4-3. OPERATING HUMIDITY ---------- 5 TO 90 % RH

4-4. STORAGE HUMIDITY ---------- 5 TO 95 % RH

5. PROTECTION:

5-1. LOCKED ROTOR PROTECTION

IMPEDANCE OF MOTOR WINDING PROTECTS MOTOR FROM FIRE IN 96 HOURS OF LOCKED ROTOR CONDITION AT THE RATED VOLTAGE.

5-2. POLARITY PROTECTION

BE CAPABLE OF WITHSTANDING IF REVERSE CONNECTION FOR POSITIVE AND NEGATIVE LEADS.

6. RE OZONE DEPLETING SUBSTANCES:

6-1. NO CONTAINING PBBs, PBBOs, CFCs, PBBEs, PBDPEs AND HCFCs.

7. PRODUCTION LOCATION

7-1. PRODUCTS WILL BE PRODUCED IN CHINA OR THAILAND OR TAIWAN.

PART NO:

DELTA MODEL: AFB1224VHE

8. BASIC RELIABILITY REQUIREMENT:

8-1. THERMAL CYCLING

LOW TEMPERATURE: -40°C
HIGH TEMPERATURE: +80°C
SOAK TIME: 30 MINUTES
TRANSITION TIME < 5 MINUTES
DUTY CYCLES: 5

8-2. HUMIDITY EXPOSURE

TEMPERATURE: +25°C ~ +65°C
HUMIDITY: 90-98% RH @ +65°C
FOR 4 HOURS/CYCLE
POWER: NON-OPERATING
TEST TIME: 168 HOURS

8-3. VIBRATION

TEMPERATURE: +25°C
ORIENTATION: X, Y, Z
POWER: NON-OPERATING
VIBRATION LEVEL: OVERALL gRMS=3.2

FREQUENCY(Hz)	PSD(G^2/Hz)
10	0.040
20	0.100
40	0.100
800	0.002
1000	0.002

TEST TIME: 2 HOURS ON EACH ORIENTATION

8-4. MECHANICAL SHOCK

TEMPERATURE: +20°C
ORIENTATION: X, Y, Z
POWER: NON-OPERATING
ACCELERATION: 20 G MIN.
PULSE: 11 ms HALF-SINE WAVE
NUMBER OF SHOCKS: 5 SHOCKS
FOR EACH DIRECTION

8-5. LIFE

TEMPERATURE: MAX , OPERATING TEMPERATURE
POWER: OPERATING
DURATION: 1000 HOURS MIN.

PART NO:

DELTA MODEL: AFB1224VHE

9. P & Q CURVE:

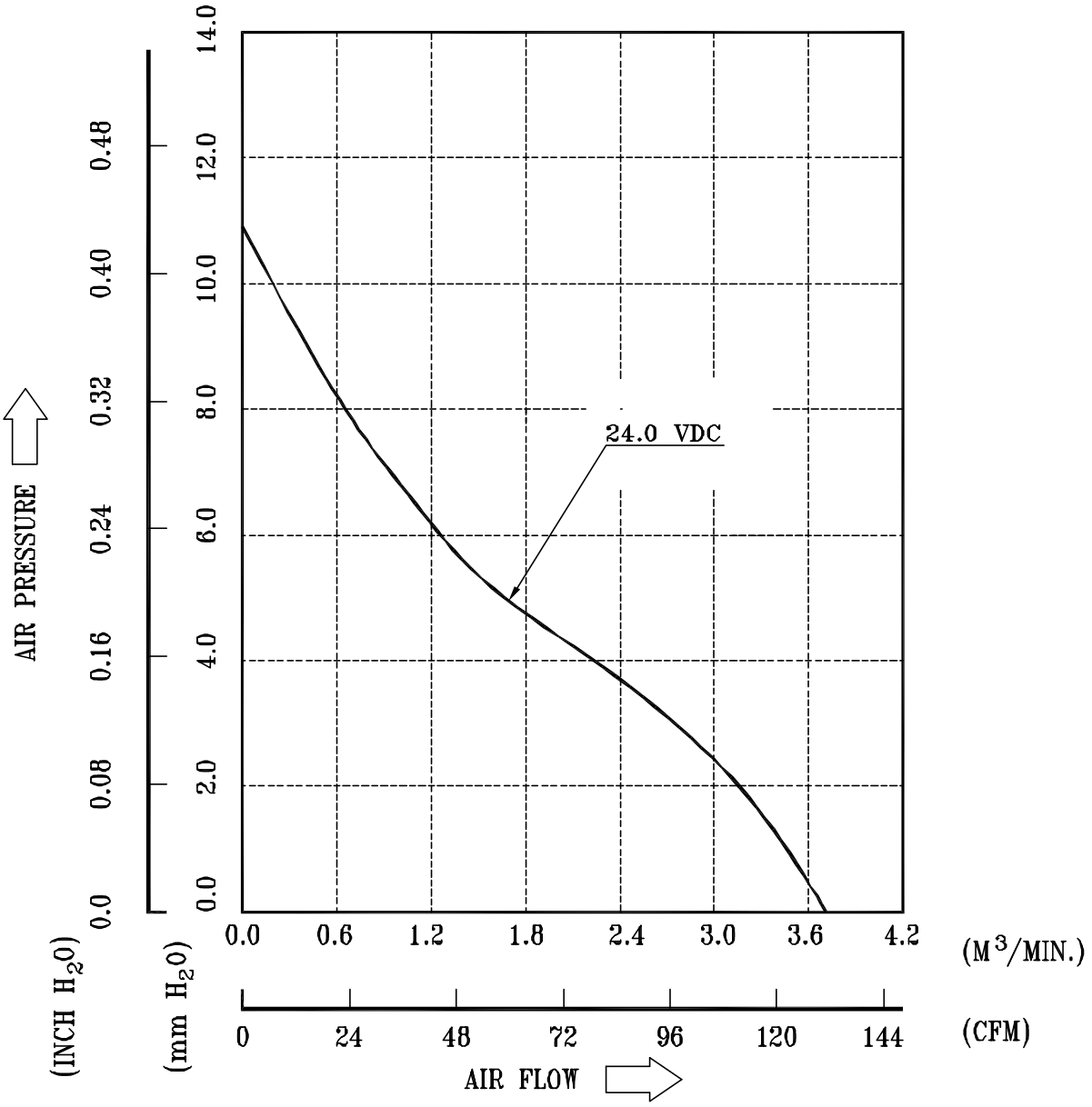

* TEST CONDITION: INPUT VOLTAGE --------- OPERATION VOLTAGE
TEMPERATURE ---------- ROOM TEMPERATURE
HUMIDITY ---------- 65%RH

PART NO:

DELTA MODEL: AFB1224VHE

10. DIMENSION DRAWING:

LABEL:

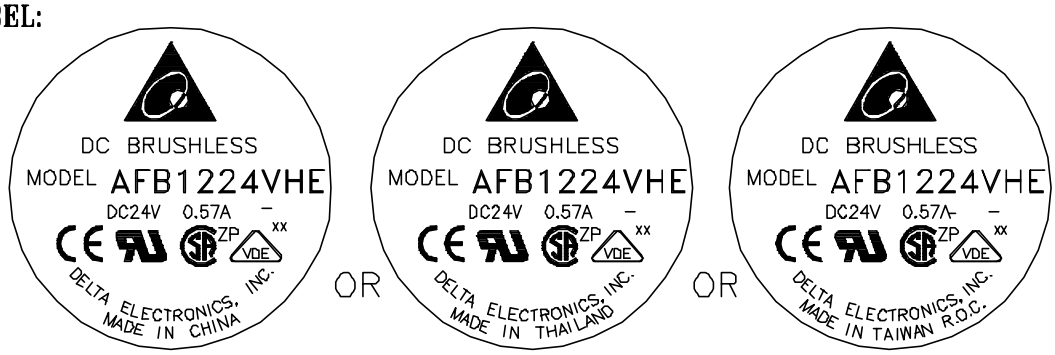

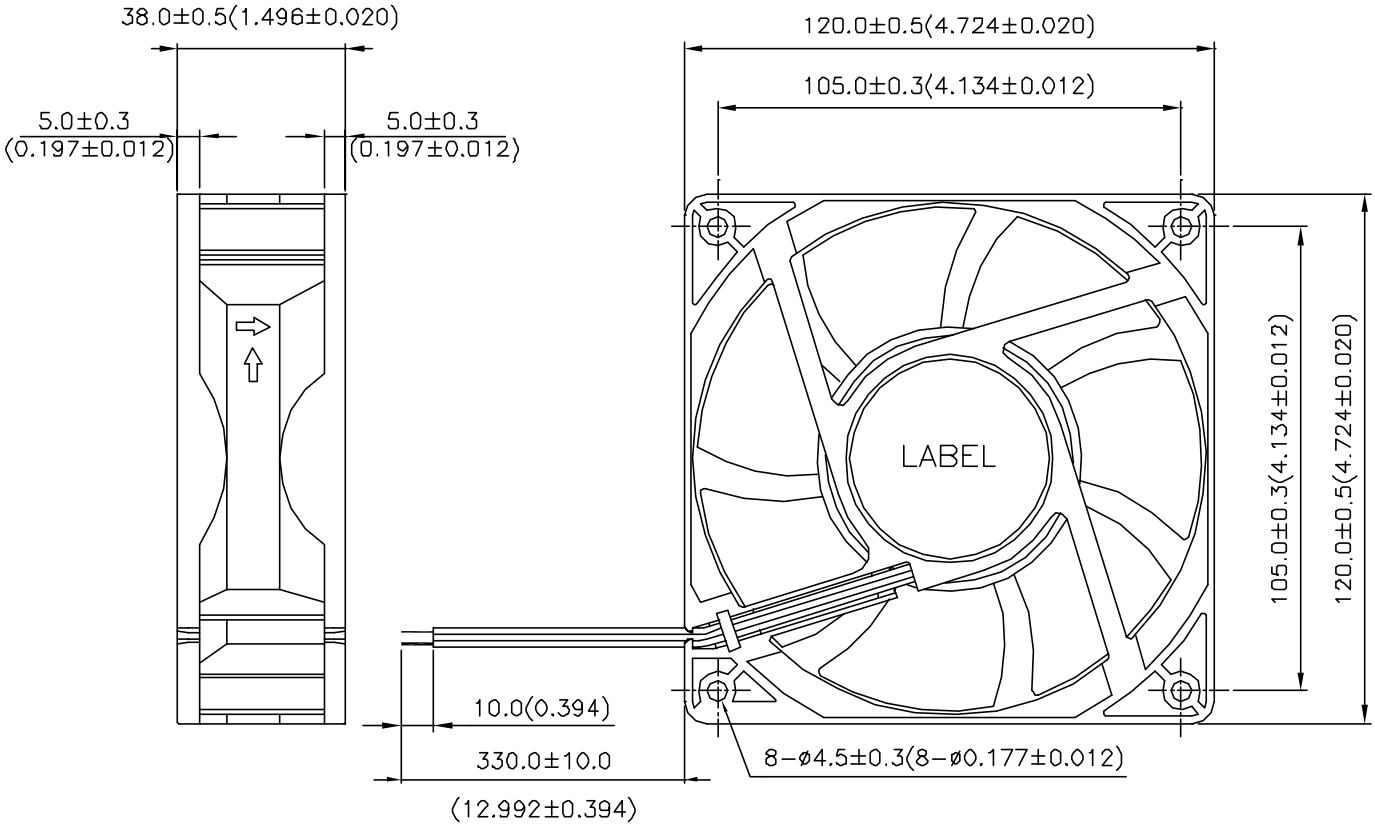

UNIT: mm(INCH)

Descriptions:

1. Delta will not guarantee the performance of the products if the application condition falls outside the parameters set forth in the specification.

2. A written request should be submitted to Delta prior to approval if deviation from this specification is required.

3. Please exercise caution when handling fans. Damage may be caused when pressure is applied to the impeller, if the fans are handled by the lead wires, or if the fans are hard-dropped to the production floor.

4. Except as pertains to some special designs, there is no guarantee that the products will be free from any such safety problems or failures as caused by the introduction of powder, droplets of water or encroachment of insect into the hub.

5. The above-mentioned conditions are representative of some unique examples and viewed as the first point of reference prior to all other information.

6. It is very important to establish the correct polarity before connecting the fan to the power source. Positive (+) and Negative (-). Damage may be caused to the fans if connection is with reverse polarity, as there is no foolproof method to protect against such error.

7. Delta fans are not suitable where any corrosive fluids are introduced to their environment.

8. Please ensure all fans are stored according to the storage temperature limits specified. Do not store fans in a high humidity environment. We highly recommend performance testing is conducted before shipping, if the fans have been stored over 6 months.

9. Not all fans are provided with the Lock Rotor Protection feature. If you impair the rotation of the impeller for the fans that do not have this function, the performance of those fans will lead to failure.

10. Please be cautious when mounting the fan. Incorrect mounting of fans may cause excess resonance, vibration and subsequent noise.

11. It is important to consider safety when testing the fans. A suitable fan guard should be fitted to the fan to guard against any potential for personal injury.

12. Except where specifically stated, all tests are carried out at relative (ambient) temperature and humidity conditions of 25°C, 65%. The test value is only for fan performance itself.

13. Be certain to connect an “over 4.7µF” capacitor to the fan externally when the application calls for using multiple fans in parallel, to avoid any unstable power.

Looking for pricing, stock, or lifecycle information?

Click below to explore more details on WIN SOURCE:

- View AFB1224VHE on WIN SOURCE
- Delta Electronics Information

Optimize Your Supply Chain with WIN SOURCE Solutions

- Global Sourcing Solution
- Obsolete Management
- Cost Control Management
- Shortage Management
- Alternative Solution
- Excess Inventory Management