THE DATASHEET OF

DS1812R-15+T&R

www.win-source.net 0086-755-83957316

DS1812
5V EconoReset with Active High Push-Pull Output

www.maxim-ic.com

FEATURES

- Automatically restarts a microprocessor after power failure
- Maintains reset for 150 ms after V_{CC} returns to an in-tolerance condition
- Reduces need for discrete components
- Precision temperature-compensated voltage reference and voltage sensor
- Low-cost TO-92, or space saving surface mount SOT-23 packages available
- Push-pull active high output
- Operating temperature -40°C to +85°C

PIN ASSIGNMENT

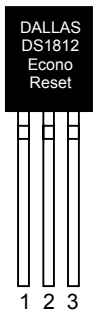

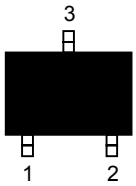

TOP VIEW
SOT-23 PACKAGE
See Mech.
Drawings Section
On Website

BOTTOM VIEW
TO-92 PACKAGE
See Mech.
Drawings Section
On Website

PIN DESCRIPTION

TO-92

1	RST	Active High Reset Output
2	V_{CC}	Power Supply
3	GND	Ground

SOT-23

1	RST	Active High Reset Output
2	V_{CC}	Power Supply
3	GND	Ground

DESCRIPTION

The DS1812 EconoReset uses a precision temperature reference and comparator circuit to monitor the status of the power supply (V_{CC}). When an out-of-tolerance condition is detected, an internal power-fail signal is generated which forces reset to the active state. When V_{CC} returns to an in-tolerance condition, the reset signal is kept in the active state for approximately 150 ms to allow the power supply and processor to stabilize.

OPERATION - POWER MONITOR

The DS1812 provides the function of detecting out-of-tolerance power supply conditions and warning a processor-based system of impending power failure. When V_{CC} is detected as out-of-tolerance, the RST signal is asserted. On power-up, RST is kept active for approximately 150 ms after the power supply has reached the selected tolerance. This allows the power supply and microprocessor to stabilize before RST is released.

BLOCK DIAGRAM (CMOS OUTPUT) Figure 1

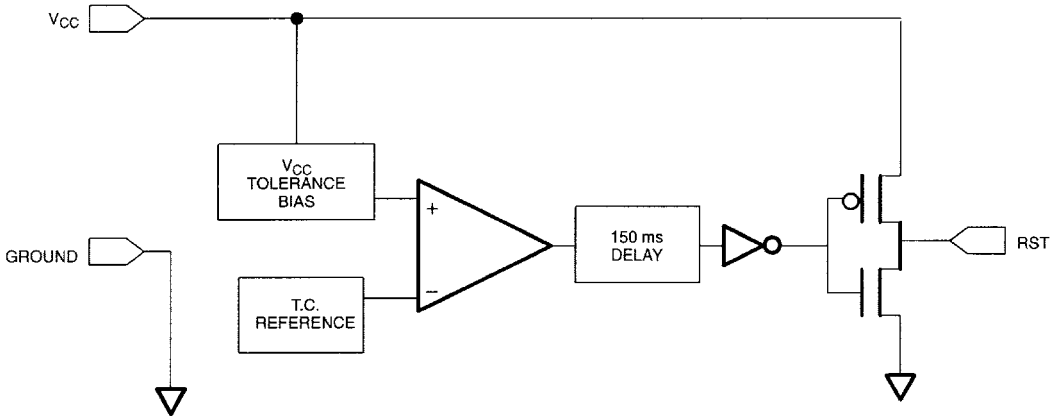

APPLICATION EXAMPLE Figure 2

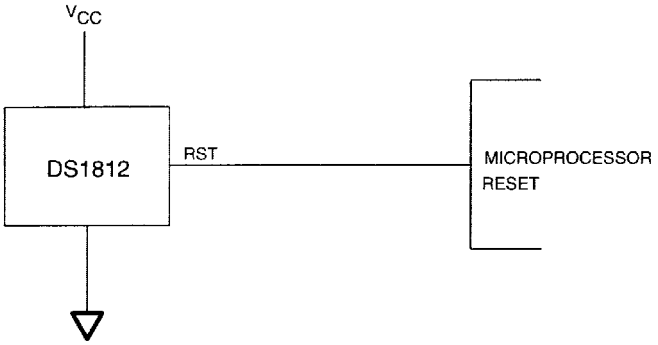

TIMING DIAGRAM: POWER-UP Figure 3

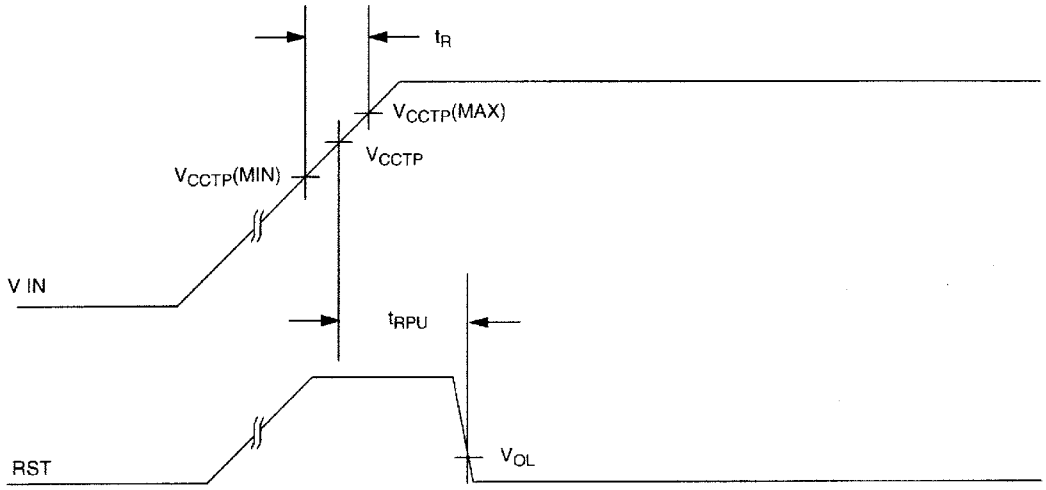

TIMING DIAGRAM: POWER-DOWN Figure 4

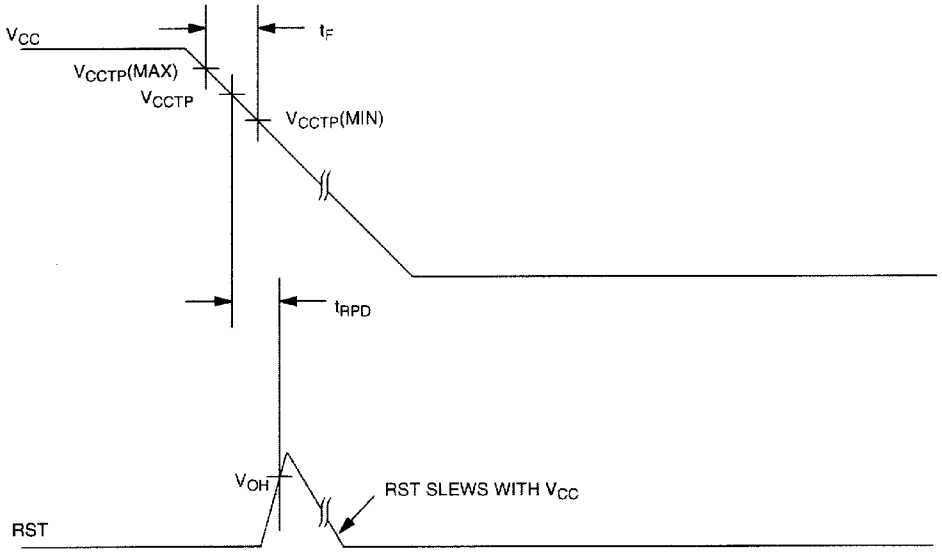

ABSOLUTE MAXIMUM RATINGS*

Voltage on V_{CC} Pin Relative to Ground	-0.5V to +7.0V
Voltage on RST Relative to Ground	-0.5V to V_{CC} +0.5V
Operating Temperature	-40°C to +85°C
Storage Temperature	-55°C to +125°C
Soldering Temperature	260°C for 10 seconds

* This is a stress rating only and functional operation of the device at these or any other conditions above those indicated in the operation sections of this specification is not implied. Exposure to absolute maximum rating conditions for extended periods of time may affect reliability.

RECOMMENDED DC OPERATING CONDITIONS (-40°C to +85°C)

PARAMETER	SYMBOL	MIN	TYP	MAX	UNITS	NOTES
Supply Voltage	V_{CC}	0.0		5.5	V	1

DC ELECTRICAL CHARACTERISTICS (-40°C to +85°C; V_{CC}=1.2V to 5.5V)

PARAMETER	SYMBOL	MIN	TYP	MAX	UNITS	NOTES
Output Voltage @ 0-500 µA	V_{OH}	V_{CC} -0.5V	V_{CC} -0.1V		V	1
Output Current @ 2.4 volts	I_{OH}		350		µA	2
Output Current @ 0.4 volts	I_{OL}	+10			mA	2
Operating Current V_{CC} < 5.5	I_{CC}		30	40	µA	3
V_{CC} Trip Point (DS1812-5)	V_{CCTP}	4.50	4.62	4.75	V	1
V_{CC} Trip Point (DS1812-10)	V_{CCTP}	4.25	4.35	4.49	V	1
V_{CC} Trip Point (DS1812-15)	V_{CCTP}	4.00	4.13	4.24	V	1
Output Capacitance	C_{OUT}			10	pF	

AC ELECTRICAL CHARACTERISTICS (-40°C to +85°C; V_{CC}=1.2V to 5.5V)

PARAMETER	SYMBOL	MIN	TYP	MAX	UNITS	NOTES
RESET Active Time	t_{RST}	100	150	300	ms	
V_{CC} Detect to RST	t_{RPD}		2	5	µs	
V_{CC} Slew Rate (V_{CCTP} (MAX) to V_{CCTP} (MIN))	t_F	300			µs	
V_{CC} Slew Rate (V_{CCTP} (MIN) to V_{CCTP} (MAX))	t_R	0			ns	
V_{CC} Detect to RST	t_{RPU}	100	150	300	ms	4

NOTES:

1. All voltages are referenced to ground.
2. Measured with $V_{CC} \geq 2.7$ volts.
3. Measured with RST output open.
4. $t_R = 5\ \mu s$.

PART MARKING CODES

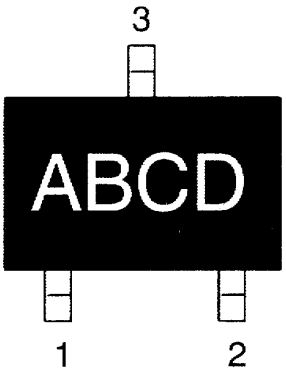

SOT-23 PACKAGE

"A", "B", &"C" represent the device type.

810	-	DS1810
811	-	DS1811
812	-	DS1812
813	-	DS1813
815	-	DS1815
816	-	DS1816
817	-	DS1817
818	-	DS1818

"D" represents the device tolerance.

A	-	5%
B	-	10%
C	-	15%
D	-	20%

Looking for pricing, stock, or lifecycle information?

Click below to explore more details on WIN SOURCE:

- View DS1812R-15+T&R on WIN SOURCE
- Maxim Integrated Information

Optimize Your Supply Chain with WIN SOURCE Solutions

- Global Sourcing Solution
- Obsolete Management
- Cost Control Management
- Shortage Management
- Alternative Solution
- Excess Inventory Management