THE DATASHEET OF

KBL602

www.win-source.net 0086-755-83957316

RECTRON SEMICONDUCTOR
TECHNICAL SPECIFICATION

KBL601 THRU KBL610

SINGLE-PHASE GLASS PASSIVATED SILICON BRIDGE RECTIFIER

VOLTAGE RANGE 50 to 1000 Volts CURRENT 6.0 Amperes

FEATURES

* Silver-plated copper leads
* Surge overload rating: 150 amperes peak
* Low leakage
* Mounting position: Any
* Low forward voltage

MECHANICAL DATA

* Epoxy: Device has UL flammability classification 94V-O

KBL

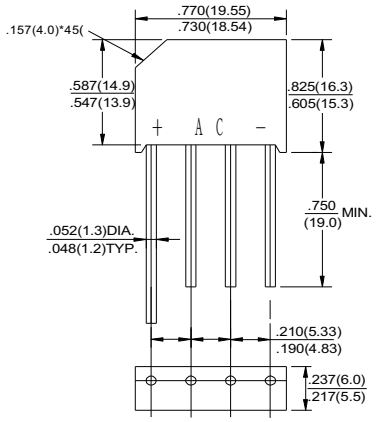

Dimensions in inches and (millimeters)

MAXIMUM RATINGS AND ELECTRICAL CHARACTERISTICS

Ratings at 25 °C ambient temperature unless otherwise specified.
resistive or inductive load.

MAXIMUM RATINGS (@ T_A=25 °C unless otherwise noted)

RATINGS	SYMBOL	KBL601	KBL602	KBL603	KBL604	KBL606	KBL608	KBL610	UNITS
Maximum Recurrent Peak Reverse Voltage	V_{RRM}	50	100	200	400	600	800	1000	Volts
Maximum RMS Voltage	V_{RMS}	35	70	140	280	420	560	700	Volts
Maximum DC Blocking Voltage	V_{DC}	50	100	200	400	600	800	1000	Volts
Maximum Average Forward Rectified Current at T_C = 75°C	I_O	6.0							Amps
Peak Forward Surge Current 8.3 ms single half sine-wave superimposed on rated load (JEDEC method)	I_{FSM}	150							Amps
Current Squared Time	I^2T	93.3							A^2S
Typical Thermal Resistance (Note 1)	$R_{\theta JC}$	3.1							°C/W
	$R_{\theta JA}$	8.6							
Operating and Storage Temperature Range	T_J, T_{STG}	-55 to + 150							°C

ELECTRICAL CHARACTERISTICS(@T_A=25 °C unless otherwise noted)

CHARACTERISTICS		SYMBOL	KBL601	KBL602	KBL603	KBL604	KBL606	KBL608	KBL610	UNITS
Maximum Instantaneous Forward Voltage at 6.0A DC		V_F	1.1							Volts
Maximum DC Reverse Current at Rated DC Blocking Voltage	@T_A = 25°C	I_R	10							uAmps
	@T_A = 150°C		1000							

NOTES : 1. Thermal Resistance : Heat-sink case mounted or if PCB mounted.
2. "ROHS compliant"
3. Measureed at 1MHz and applied reverse voltage of 4.0 volts.

2020-04/10
REV:A

RATING AND CHARACTERISTICS CURVES (KBL601 THRU KBL610)

FLG.1-MAXIMUM FORWARD SUNRGE CURRENT

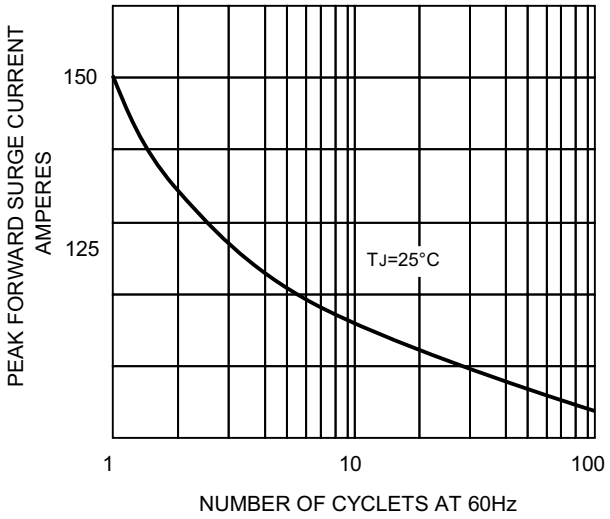

FIG.1-DERATING CURVE
OUTPUT RECTIFIED CURRENT

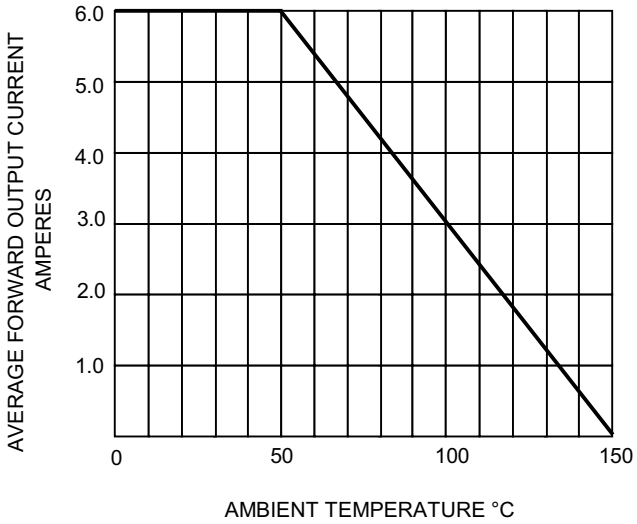

FIG.4-TYPICAL FORWARD CHARACTERISTICS

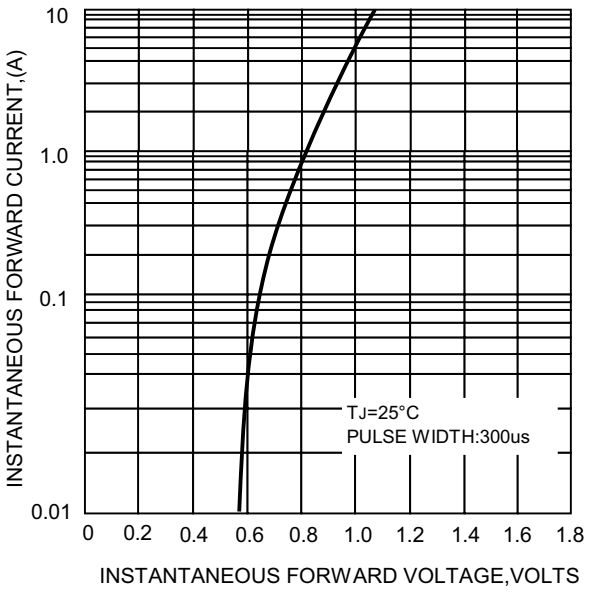

FIG.4– TYPICAL REVERSE
CHARACTERISTICS

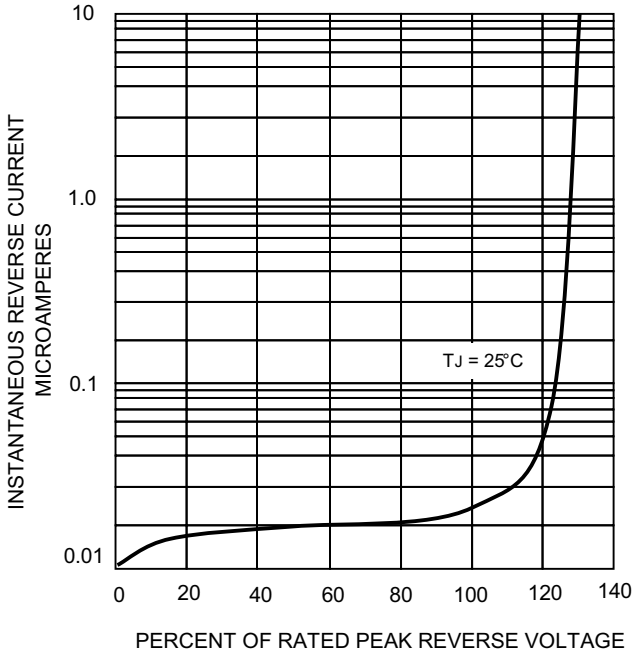

Marking Description

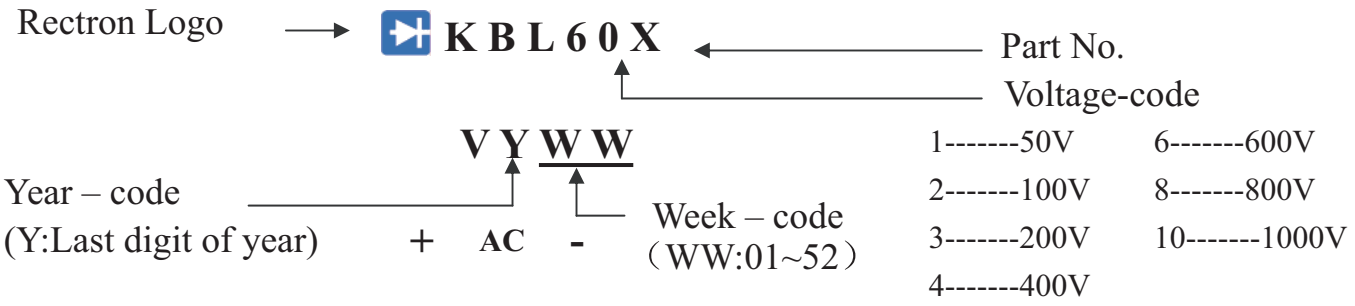

PACKAGING OF DIODE AND BRIDGE RECTIFIERS

TUBE PACK

PACKAGE	PACKING CODE	EA PER BOX	INNER BOX SIZE (mm)	CARTON SIZE (mm)	EA PER CARTON
KBL	-C	1,150	49*14.5*13.2	49.5*32.5*15.5	2,300

DISCLAIMER NOTICE

Rectron Inc reserves the right to make changes without notice to any product specification herein, to make corrections, modifications, enhancements or other changes. Rectron Inc or anyone on its behalf assumes no responsibility or liability for any errors or inaccuracies. Data sheet specifications and its information contained are intended to provide a product description only. "Typical" parameters which may be included on RECTRON data sheets and/ or specifications can and do vary in different applications and actual performance may vary over time. Rectron Inc does not assume any liability arising out of the application or use of any product or circuit.

Rectron products are not designed, intended or authorized for use in medical, life-saving implant or other applications intended for life-sustaining or other related applications where a failure or malfunction of component or circuitry may directly or indirectly cause injury or threaten a life without expressed written approval of Rectron Inc. Customers using or selling Rectron components for use in such applications do so at their own risk and shall agree to fully indemnify Rectron Inc and its subsidiaries harmless against all claims, damages and expenditures.

Looking for pricing, stock, or lifecycle information?

Click below to explore more details on WIN SOURCE:

- View KBL602 on WIN SOURCE
- Rectron USA Information

Optimize Your Supply Chain with WIN SOURCE Solutions

- Global Sourcing Solution
- Obsolete Management
- Cost Control Management
- Shortage Management
- Alternative Solution
- Excess Inventory Management