THE DATASHEET OF

74LVC1G126QW5-7

www.win-source.net 0086-755-83957316

Description

The 74LVC1G126Q is an automotive-compliant, single, non-inverting buffer/bus driver with a 3-state output. The output enters a high-impedance state when a LOW level is applied to the output enable (OE) pin. The device is designed for operation with a power supply range of 1.65V to 5.5V. The inputs are tolerant to 5.5V, allowing this device to be used in a mixed-voltage environment. The device is fully specified for partial power down applications using I_{OFF}. The I_{OFF} circuitry disables the output preventing damaging current backflow when the device is powered down.

Pin Assignments

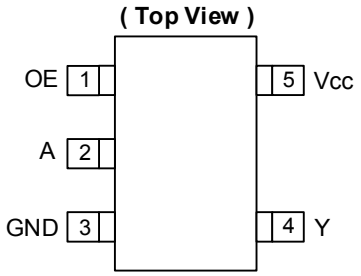

SOT25 / SOT353

Features

- Grade 1 Ambient Temperature Operation: -40°C to +125°C
- Wide Supply Voltage Range from 1.65V to 5.5V
- ±24mA Output Drive at 3.3V
- CMOS Low Power Consumption
- I_{OFF} Supports Partial-Power-Down Mode Operation
- Inputs Accept up to 5.5V
- ESD Protection Tested per AEC-Q100
  - Exceeds 2000V Human Body Model (AEC-Q100-002)
  - Exceeds 1000V Charged Device Model (AEC-Q100-011)
- Latch-Up Exceeds 100mA (AEC-Q100-004)
- **Totally Lead-Free & Fully RoHS Compliant (Notes 1 & 2)**
- **Halogen and Antimony Free. "Green" Device (Note 3)**
- **The 74LVC1G126Q is suitable for automotive applications requiring specific change control; this part is AEC-Q100 qualified, PPAP capable, and manufactured in IATF 16949 certified facilities.**
  https://www.diodes.com/quality/product-definitions/

Applications

- Voltage Level Shifting
- General Purpose Logic
- Power Down Signal Isolation
- Wide Array of Products, such as:
  - Automotive Applications within Grade 1 Temperature Range
  - Industrial Computing/Controls/Automation
  - High Reliability Networking/Communications
  - Industrial/Agricultural Equipment

Notes:
1. No purposely added lead. Fully EU Directive 2002/95/EC (RoHS), 2011/65/EU (RoHS 2) & 2015/863/EU (RoHS 3) compliant.
2. See https://www.diodes.com/quality/lead-free/ for more information about Diodes Incorporated's definitions of Halogen- and Antimony-free, "Green" and Lead-free.
3. Halogen- and Antimony-free "Green" products are defined as those which contain <900ppm bromine, <900ppm chlorine (<1500ppm total Br + Cl) and <1000ppm antimony compounds.

© Diodes Incorporated

Pin Descriptions

Pin Name	Description
OE	Output Enable Active HIGH
A	Data Input
GND	Ground
Y	Data Output
V_{CC}	Supply Voltage

Logic Diagram

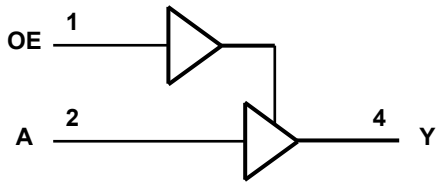

Function Table

Inputs		Output
OE	A	Y
H	H	H
H	L	L
L	X	Z

Absolute Maximum Ratings (Notes 4 & 5)

Symbol	Description	Rating	Unit
ESD HBM	Human Body Model ESD Protection	2	kV
ESD CDM	Charged Device Model ESD Protection	1	kV
V_{CC}	Supply Voltage Range	-0.5 to 6.5	V
V_I	Input Voltage Range	-0.5 to 6.5	V
V_O	Voltage Applied to Output in High Impedance or I_{OFF} State	-0.5 to 6.5	V
V_O	Voltage Applied to Output in High or Low State	-0.5 to V_{CC} +0.5	V
I_{IK}	Input Clamp Current $V_I < 0$	-50	mA
I_{OK}	Output Clamp Current	-50	mA
I_O	Continuous Output Current	±50	mA
I_{CC}, I_{GN}	Continuous Current Through V_{CC} or GND	±100	mA
T_J	Operating Junction Temperature	-40 to +150	°°C
T_{STG}	Storage Temperature	-65 to +150	°C

Notes: 4. Stresses beyond the absolute maximum can result in immediate failure or reduced reliability. These are stress values and device operation should be within recommend values.
5. Forcing the maximum allowed voltage could cause a condition exceeding the maximum current or conversely forcing the maximum current could cause a condition exceeding the maximum voltage. The ratings of both current and voltage must be maintained within the controlled range.

© Diodes Incorporated

Recommended Operating Conditions (Note 6)

Symbol	Parameter		Min	Max	Unit
V_{CC}	Operating Voltage	Operating	1.65	5.5	V
		Data Retention Only	1.5	—	V
V_{IH}	High-Level Input Voltage	V_{CC} = 1.65V to 1.95V	0.65 × V_{CC}	—	V
		V_{CC} = 2.3V to 2.7V	1.7	—	
		V_{CC} = 3V to 3.6V	2	—	
		V_{CC} = 4.5V to 5.5V	0.7 × V_{CC}	—	
V_{IL}	Low-Level Input Voltage	V_{CC} = 1.65V to 1.95V	—	0.35 × V_{CC}	V
		V_{CC} = 2.3V to 2.7V	—	0.7	
		V_{CC} = 3V to 3.6V	—	0.8	
		V_{CC} = 4.5V to 5.5V	—	0.3 × V_{CC}	
V_I	Input Voltage		0	5.5	V
V_O	Output Voltage		0	V_{CC}	V
I_{OH}	High-Level Output Current	V_{CC} = 1.65V	—	-4	mA
		V_{CC} = 2.3V	—	-8	
		V_{CC} = 2.7V	—	-12	
		V_{CC} = 3V	—	-16	
			—	-24	
		V_{CC} = 4.5V	—	-32	
I_{OL}	Low-Level Output Current	V_{CC} = 1.65V	—	4	mA
		V_{CC} = 2.3V	—	8	
		V_{CC} = 2.7V	—	12	
		V_{CC} = 3V	—	16	
			—	24	
		V_{CC} = 4.5V	—	32	
Δt/ΔV	Input Transition Rise or Fall Rate	V_{CC} = 1.8V ± 0.15V, 2.5V ± 0.2V	—	20	ns/V
		V_{CC} = 3.3V ± 0.3V	—	10	
		V_{CC} = 5V ± 0.5V	—	5	
T_A	Operating Free-Air Temperature	—	-40	+125	°C

Note: 6. Unused inputs should be held at V_{CC} or Ground.

© Diodes Incorporated

Electrical Characteristics (All typical values are at V_{CC} = 3.3V, T_A = +25°C)

Symbol	Parameter	Test Conditions		V_{CC}	-40°C to +125°C			Unit
					Min	Typ	Max	
V_{OH}	High Level Output Voltage	$V_I = V_{IH}$ or V_{IL}	I_{OH} = -100µA	1.65V to 5.5V	V_{CC} – 0.1	—	—	V
			I_{OH} = -4mA	1.65V	0.95	—	—	
			I_{OH} = -8mA	2.3V	1.7	—	—	
			I_{OH} = -12mA	2.7V	1.9	—	—	
			I_{OH} = -24mA	3V	2.0	—	—	
			I_{OH} = -32mA	4.5V	3.4	—	—	
V_{OL}	Low Level Output Voltage	$V_I = V_{IH}$ or V_{IL}	I_{OL} = 100µA	1.65V to 5.5V	—	—	0.10	V
			I_{OL} = 4mA	1.65V	—	—	0.70	
			I_{OL} = 8mA	2.3V	—	—	0.45	
			I_{OL} = 12mA	2.7V	—	—	0.60	
			I_{OL} = 24mA	3V	—	—	0.80	
			I_{OL} = 32mA	4.5V	—	—	0.80	
I_I	Input Current	V_I = 5.5V or GND		0 to 5.5V	—	±0.1	±1	µA
I_{OFF}	Power Down Leakage Current	V_I or V_O = 5.5V		0V	—	—	±2	µA
I_{OZ}	Z-State Leakage Current	V_O = Ground to 5.5V		3.6V	—	—	±2	µA
I_{CC}	Supply Current	V_I = 5.5V or GND I_O = 0		5.5V	—	0.1	4	µA
ΔI_{CC}	Additional Supply Current	One input at V_{CC} – 0.6V Other inputs at V_{CC} or GND		3V to 5.5V	—	—	500	µA
C_I	Input Capacitance	V_I = GND to V_{CC}		3.3V	—	5.0	—	pF

Package Characteristics

Symbol	Parameter	Package	Test Conditions	Min	Typ	Max	Unit
θ_{JA}	Thermal Resistance Junction-to-Ambient	SOT25	Note 7	—	184	—	°C/W
		SOT353		—	385	—	
θ_{JC}	Thermal Resistance Junction-to-Case	SOT25	Note 7	—	62	—	°C/W
		SOT353		—	164	—	

Note: 7. Device mounted on FR-4 substrate PC board, 2oz copper, with minimum recommended pad layout.

© Diodes Incorporated

Switching Characteristics

Figure 1 Typical Values at T_A = +25°C and nominal voltages 1.8V, 2.5V, 2.7V, 3.3V, and 5.0V.

Parameter	From Input	To Output	V_{CC}	T_A = -40°C to +125°C			Unit
				Min	Typ	Max	
t_{PD}	A	Y	1.8V ± 0.15V	1.0	3.0	10.5	ns
			2.5V ± 0.2V	0.5	2.1	7.0	
			2.7V	0.5	2.3	7.0	
			3.3V ± 0.3V	0.5	2.0	6.0	
			5.0V ± 0.5V	0.5	1.7	5.5	
t_{EN}	OE	Y	1.8 V ± 0.15V	1.0	3.2	12.0	ns
			2.5V ± 0.2V	0.5	2.2	8.5	
			2.7V	0.5	2.4	8.5	
			3.3V ± 0.3V	0.5	2.1	7.0	
			5.0V ± 0.5V	0.5	1.6	6.5	
t_{DIS}	OE	Y	1.8V ± 0.15V	1.0	4.3	12.0	ns
			2.5V ± 0.2V	0.5	2.7	7.0	
			2.7V	0.5	3.4	7.0	
			3.3V ± 0.3V	0.5	3.0	7.0	
			5.0V ± 0.5V	0.5	2.2	5.5	

Operating Characteristics

T_A = +25°C

Parameter			Test Conditions	V_{CC} = 1.8V	V_{CC} = 2.5V	V_{CC} = 3.3V	V_{CC} = 5V	Unit
				Typ	Typ	Typ	Typ	
C_{PD}	Power Dissipation Capacitance	Outputs Enabled	f = 10MHz	19	19	19	21	pF
		Outputs Disabled		2	2	3	4	

© Diodes Incorporated

Parameter Measurement Information

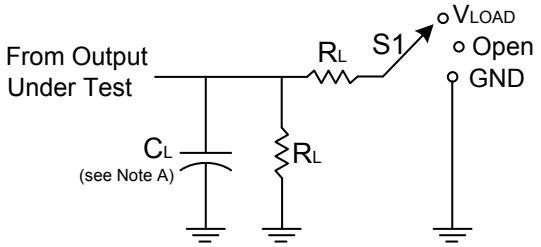

TEST	S1
t_{PLH}/t_{PHL}	Open
t_{PLZ}/t_{PZL}	V_{LOAD}
t_{PHZ}/t_{PZH}	GND

V_{CC}	Inputs		V_M	V_{LOAD}	C_L	R_L	V_Δ
	V_I	t_R/t_F					
1.8V±0.15V	V_{CC}	≤2ns	$V_{CC}/2$	$2 \times V_{CC}$	30pF	1kΩ	0.15V
2.5V±0.2V	V_{CC}	≤2ns	$V_{CC}/2$	$2 \times V_{CC}$	30pF	500Ω	0.15V
2.7V	2.7V	≤2.5ns	1.5V	6V	50pF	500Ω	0.3V
3.3V±0.3V	3V	≤2.5ns	1.5V	6V	50pF	500Ω	0.3V
5V±0.5V	V_{CC}	≤2.5ns	$V_{CC}/2$	$2 \times V_{CC}$	50pF	500Ω	0.3V

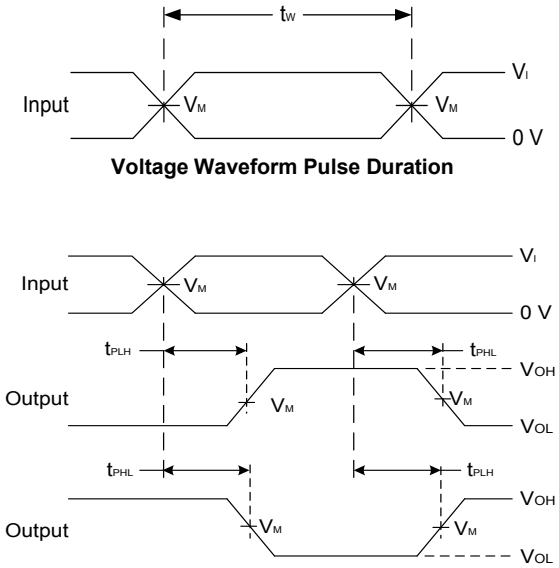

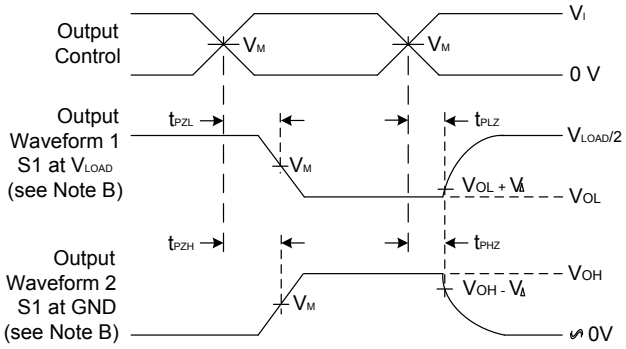

Figure 1. Load Circuit and Voltage Waveforms

Notes:
A. Includes test lead and test apparatus capacitance.
B. All pulses are supplied at pulse repetition rate ≤ 10MHz.
C. Inputs are measured separately one transition per measurement.
D. t_{PLZ} and t_{PHZ} are the same as t_{DIS}.
E. t_{PZL} and t_{PZH} are the same as t_{EN}.
F. t_{PLH} and t_{PHL} are the same as t_{PD}.

© Diodes Incorporated

Ordering Information (Note 8)

74 LVC 1G 126 Q XX - 7

Logic Device	Function	Automotive	Package	Packing
74 : Logic Prefix LVC : 1.65V to 5.5V Logic Family 1G : One Gate	126: 3-State Buffer OE active HIGH	Q : AEC-Q100	SE : SOT353 W5 : SOT25	7 : 7" Tape & Reel

Part Number	Package Code	Package (Notes 9 & 10)	Package Size	7" Tape and Reel	
				Quantity	Part Number Suffix
74LVC1G126QSE-7	SE	SOT353	2.15mm × 2.1mm × 1.1mm 0.65mm lead pitch	3000/Tape & Reel	-7
74LVC1G126QW5-7	W5	SOT25	3.0mm × 2.8mm × 1.2mm 0.95mm lead pitch	3000/Tape & Reel	-7

Notes: 8. For packaging details, go to our website at https://www.diodes.com/design/support/packaging/diodes-packaging/.
9. Pad layout as shown in Diodes Incorporated's package outline PDFs, which can be found on our website at http://www.diodes.com/package-outlines.html.
10. The taping orientation is located on our website at https://www.diodes.com/assets/Packaging-Support-Docs/ap02007.pdf.

Marking Information

(Top View)

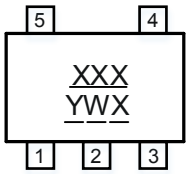

SOT25 / SOT353

XXX : Identification Code
Y : Year 0~9
W : Week: A~Z 1~26 week
a~z 27~52 week
z represents week 52 and 53
X : A~Z : Internal Code

Part Number	Package	Identification Code
74LVC1G126QW5-7	SOT25	UZQ
74LVC1G126QSE-7	SOT353	UZQ

© Diodes Incorporated

Package Outline Dimensions

Please see http://www.diodes.com/package-outlines.html for the latest version.

(1) Package Type: SOT25

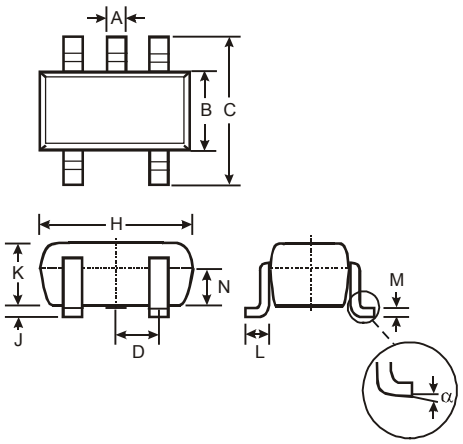

SOT25			
Dim	**Min**	**Max**	**Typ**
A	0.35	0.50	0.38
B	1.50	1.70	1.60
C	2.70	3.00	2.80
D	-	-	0.95
H	2.90	3.10	3.00
J	0.013	0.10	0.05
K	1.00	1.30	1.10
L	0.35	0.55	0.40
M	0.10	0.20	0.15
N	0.70	0.80	0.75
α	0°	8°	-
All Dimensions in mm			

(2) Package Type: SOT353

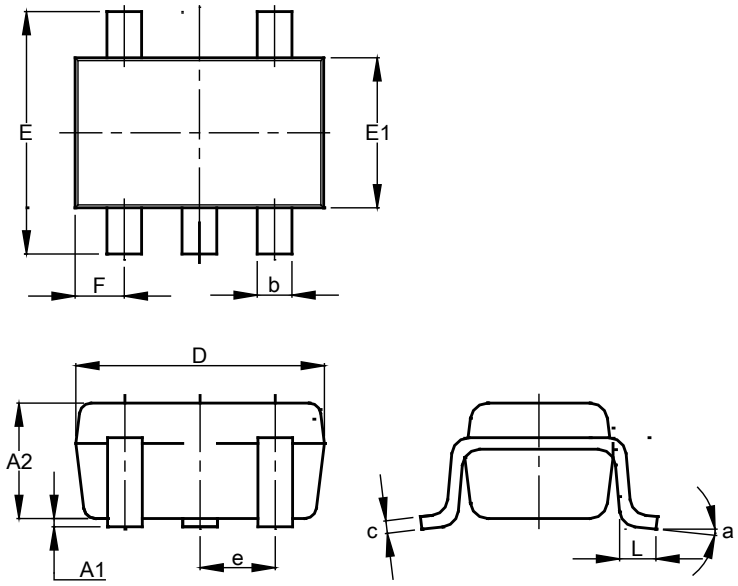

SOT353			
Dim	**Min**	**Max**	**Typ**
A1	0.00	0.10	0.05
A2	0.90	1.00	0.95
b	0.10	0.30	0.25
c	0.10	0.22	0.11
D	1.80	2.20	2.15
E	2.00	2.20	2.10
E1	1.15	1.35	1.30
e	0.650 BSC		
F	0.40	0.45	0.425
L	0.25	0.40	0.30
a	0°	8°	--
All Dimensions in mm			

© Diodes Incorporated

Suggested Pad Layout

Please see http://www.diodes.com/package-outlines.html for the latest version.

(1) Package Type: SOT25

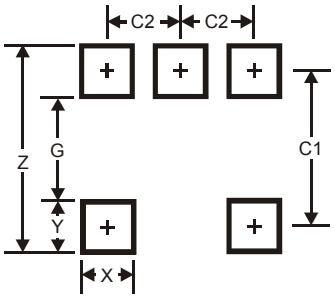

Dimensions	Value
Z	3.20
G	1.60
X	0.55
Y	0.80
C1	2.40
C2	0.95

(2) Package Type: SOT353

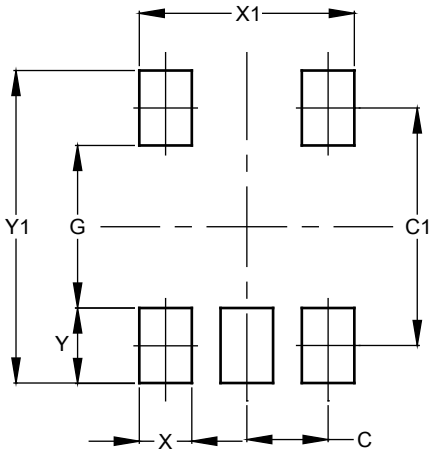

Dimensions	Value (in mm)
C	0.650
C1	1.900
G	1.300
X	0.420
X1	1.720
Y	0.600
Y1	2.500

Mechanical Data

SOT25

- Moisture Sensitivity: Level 1 per J-STD-020
- Terminals: Finish – Matte Tin Plated Leads, Solderable per MIL-STD-202, Method 208 e3
- Weight: 0.0158 grams (Approximate)

SOT353

- Moisture Sensitivity: Level 1 per J-STD-020
- Terminals: Finish – Matte Tin Plated Leads, Solderable per MIL-STD-202, Method 208 e3
- Weight: 0.0064 grams (Approximate)

© Diodes Incorporated

IMPORTANT NOTICE

1. DIODES INCORPORATED AND ITS SUBSIDIARIES ("DIODES") MAKE NO WARRANTY OF ANY KIND, EXPRESS OR IMPLIED, WITH REGARDS TO ANY INFORMATION CONTAINED IN THIS DOCUMENT, INCLUDING, BUT NOT LIMITED TO, THE IMPLIED WARRANTIES OF MERCHANTABILITY, FITNESS FOR A PARTICULAR PURPOSE OR NON-INFRINGEMENT OF THIRD PARTY INTELLECTUAL PROPERTY RIGHTS (AND THEIR EQUIVALENTS UNDER THE LAWS OF ANY JURISDICTION).

2. The Information contained herein is for informational purpose only and is provided only to illustrate the operation of Diodes products described herein and application examples. Diodes does not assume any liability arising out of the application or use of this document or any product described herein. This document is intended for skilled and technically trained engineering customers and users who design with Diodes products. Diodes products may be used to facilitate safety-related applications; however, in all instances customers and users are responsible for (a) selecting the appropriate Diodes products for their applications, (b) evaluating the suitability of the Diodes products for their intended applications, (c) ensuring their applications, which incorporate Diodes products, comply the applicable legal and regulatory requirements as well as safety and functional-safety related standards, and (d) ensuring they design with appropriate safeguards (including testing, validation, quality control techniques, redundancy, malfunction prevention, and appropriate treatment for aging degradation) to minimize the risks associated with their applications.

3. Diodes assumes no liability for any application-related information, support, assistance or feedback that may be provided by Diodes from time to time. Any customer or user of this document or products described herein will assume all risks and liabilities associated with such use, and will hold Diodes and all companies whose products are represented herein or on Diodes' websites, harmless against all damages and liabilities.

4. Products described herein may be covered by one or more United States, international or foreign patents and pending patent applications. Product names and markings noted herein may also be covered by one or more United States, international or foreign trademarks and trademark applications. Diodes does not convey any license under any of its intellectual property rights or the rights of any third parties (including third parties whose products and services may be described in this document or on Diodes' website) under this document.

5. Diodes products are provided subject to Diodes' Standard Terms and Conditions of Sale (https://www.diodes.com/about/company/terms-and-conditions/terms-and-conditions-of-sales/) or other applicable terms. This document does not alter or expand the applicable warranties provided by Diodes. Diodes does not warrant or accept any liability whatsoever in respect of any products purchased through unauthorized sales channel.

6. Diodes products and technology may not be used for or incorporated into any products or systems whose manufacture, use or sale is prohibited under any applicable laws and regulations. Should customers or users use Diodes products in contravention of any applicable laws or regulations, or for any unintended or unauthorized application, customers and users will (a) be solely responsible for any damages, losses or penalties arising in connection therewith or as a result thereof, and (b) indemnify and hold Diodes and its representatives and agents harmless against any and all claims, damages, expenses, and attorney fees arising out of, directly or indirectly, any claim relating to any noncompliance with the applicable laws and regulations, as well as any unintended or unauthorized application.

7. While efforts have been made to ensure the information contained in this document is accurate, complete and current, it may contain technical inaccuracies, omissions and typographical errors. Diodes does not warrant that information contained in this document is error-free and Diodes is under no obligation to update or otherwise correct this information. Notwithstanding the foregoing, Diodes reserves the right to make modifications, enhancements, improvements, corrections or other changes without further notice to this document and any product described herein. This document is written in English but may be translated into multiple languages for reference. Only the English version of this document is the final and determinative format released by Diodes.

8. Any unauthorized copying, modification, distribution, transmission, display or other use of this document (or any portion hereof) is prohibited. Diodes assumes no responsibility for any losses incurred by the customers or users or any third parties arising from any such unauthorized use.

Copyright © 2021 Diodes Incorporated

www.diodes.com

Looking for pricing, stock, or lifecycle information?

Click below to explore more details on WIN SOURCE:

- View 74LVC1G126QW5-7 on WIN SOURCE
- Diodes Incorporated Information

Optimize Your Supply Chain with WIN SOURCE Solutions

- Global Sourcing Solution
- Obsolete Management
- Cost Control Management
- Shortage Management
- Alternative Solution
- Excess Inventory Management