THE DATASHEET OF

SMDJ60CA/TR13

www.win-source.net 0086-755-83957316

Innovative Service Around the Globe YAGEO

DATA SHEET

TRANSIENT VOLTAGE SUPPRESSORS
AC/DC POWER SUPPLY

SMDJ series

RoHS compliant & Halogen free

Product specification– June 30, 2023 V.4

Transient Voltage Suppressors (TVS) Data Sheet

Features

- For surface mounted applications in order to optimize board space
- Low profile package
- Built-in strain relief
- Glass passivated junction
- Low inductance
- Excellent clamping capability
- 3000W peak pulse power capability at 10/1000μs waveform, repetition rate (duty cycle): 0.01%
- Fast response time
- Typical I_R less than 1μA above 10V
- High Temperature soldering: 260℃/10 seconds at terminals
- Plastic package has underwriters laboratory flammability 94V-0
- Meets MSL level 1, per J-STD-020
- Safety certification: UL
- IEC61000-4-2 ESD 30KV Air, 30KV contact compliance

Mechanical Data

- Case: JEDEC DO-214AB. Molded plastic over glass passivated junction
- Terminal: Tin plated, solderable per MIL-STD-750, Method 2026
- Polarity: Color band denotes cathode except bi-directional models
- Standard Packaging: 16mm tape (EIA STD RS-481)
- Weight: 0.28g

Applications

- I/O interface
- AC/DC power supply
- Low frequency signal transmission line (RS232, RS485, etc.)

Maximum Ratings and Characteristics

Ratings at 25℃ ambient temperature unless otherwise specified.

Rating	Symbol	Value	Units
Peak pulse power dissipation at 10/1000μs waveform (Note1, Note2, Fig.1)	P_{PPM}	Minimum 3000	Watts
Peak pulse current of at 10/1000μs waveform (Note 1, Fig.3)	I_{PPM}	See Table	Amps
Steady state power dissipation at T_A=50℃ (Fig.5)	$P_{M(AV)}$	6.5	Watts
Peak forward surge current, 8.3ms single half sine-wave superimposed on rated load, (JEDEC Method) (Note3, Fig.6)	I_{FSM}	300	Amps
Operating junction and Storage Temperature Range.	T_J,T_{STG}	-55 to +150	℃
Typical thermal resistance junction to lead	$R_{\theta JL}$	15	℃/W
Typical thermal resistance junction to ambient	$R_{\theta JA}$	75	℃/W

Notes: 1. Non-repetitive current pulse, per Fig.3 and derated above T_A=25℃ per Fig.2.
2. Mounted on 8.0mm×8.0mm copper pads to each terminal.
3. 8.3ms single half sine-wave, or equivalent square wave, duty cycle=4 pulses per minutes maximum.

Dimensions (SMC/DO-214AB)

Product:

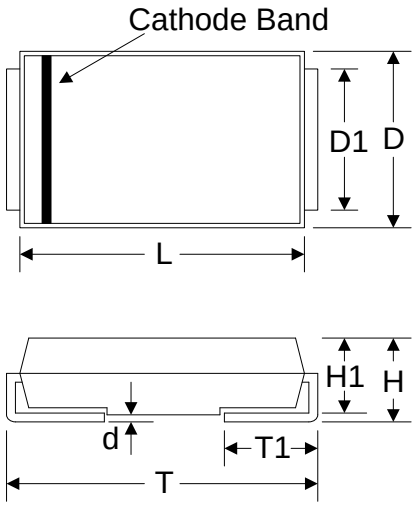

Pad:

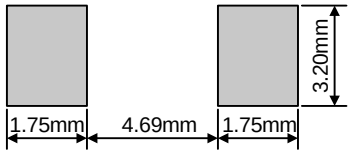

Symbol	Millimeters		Inches	
	Min.	Max.	Min.	Max.
L	6.60	7.11	0.260	0.280
D	5.59	6.22	0.220	0.245
D1	2.90	3.20	0.114	0.126
T	7.75	8.13	0.305	0.320
T1	0.76	1.52	0.030	0.060
d	-	0.203	-	0.008
H	2.20	2.80	0.087	0.110
H1	2.06	2.62	0.079	0.103

Electrical Characteristics (T_A=25℃)

Part Number		Device Marking Code		Reverse Stand-Off Voltage	Breakdown Voltage @I_T	Test Current	Maximum Clamping Voltage @I_{PP}	Peak Pulse Current	Reverse Leakage @V_{RWM}
Unidirectional	Bidirectional	UNI	BI	V_{RWM}(V)	V_{BR}(V)	I_T(mA)	V_C(V)	I_{PP}(A)	I_R(μA)
SMDJ5.0A	SMDJ5.0CA	RDE	DDE	5.0	6.40~7.00	10	9.2	326.1	800
SMDJ6.0A	SMDJ6.0CA	RDG	DDG	6.0	6.67~7.37	10	10.3	291.3	800
SMDJ6.5A	SMDJ6.5CA	RDK	DDK	6.5	7.22~7.98	10	11.2	267.9	500
SMDJ7.0A	SMDJ7.0CA	PDM	DDM	7.0	7.78~8.60	10	12.0	250.0	200
SMDJ7.5A	SMDJ7.5CA	PDP	DDP	7.5	8.33~9.21	1	12.9	232.6	100
SMDJ8.0A	SMDJ8.0CA	PDR	DDR	8.0	8.89~9.83	1	13.6	220.6	50
SMDJ8.5A	SMDJ8.5CA	PDT	DDT	8.5	9.44~10.40	1	14.4	208.3	20
SMDJ9.0A	SMDJ9.0CA	PDV	DDV	9.0	10.00~11.10	1	15.4	194.8	10
SMDJ10A	SMDJ10CA	PDX	DDX	10.0	11.10~12.30	1	17.0	176.5	5
SMDJ11A	SMDJ11CA	PDZ	DDZ	11.0	12.20~13.50	1	18.2	164.8	2
SMDJ12A	SMDJ12CA	PEE	DEE	12.0	13.30~14.70	1	19.9	150.8	2
SMDJ13A	SMDJ13CA	PEG	DEG	13.0	14.40~15.90	1	21.5	139.5	2
SMDJ14A	SMDJ14CA	PEK	DEK	14.0	15.60~17.20	1	23.2	129.3	2
SMDJ15A	SMDJ15CA	PEM	DEM	15.0	16.70~18.50	1	24.4	123.0	2
SMDJ16A	SMDJ16CA	PEP	DEP	16.0	17.80~19.70	1	26.0	115.4	2
SMDJ17A	SMDJ17CA	PER	DER	17.0	18.90~20.90	1	27.6	108.7	2

Electrical Characteristics (T_A=25℃)

Part Number		Device Marking Code		Reverse Stand-Off Voltage	Breakdown Voltage @I_T	Test Current	Maximum Clamping Voltage @I_{PP}	Peak Pulse Current	Reverse Leakage @V_{RWM}
Unidirectional	Bidirectional	UNI	BI	V_{RWM}(V)	V_{BR}(V)	I_T(mA)	V_C(V)	I_{PP}(A)	I_R(μA)
SMDJ18A	SMDJ18CA	PET	DET	18.0	20.00~22.10	1	29.2	102.7	2
SMDJ20A	SMDJ20CA	PEV	DEV	20.0	22.20~24.50	1	32.4	92.6	2
SMDJ22A	SMDJ22CA	PEX	DEX	22.0	24.40~26.90	1	35.5	84.5	2
SMDJ24A	SMDJ24CA	PEZ	DEZ	24.0	26.70~29.50	1	38.9	77.1	2
SMDJ26A	SMDJ26CA	PFE	DFE	26.0	28.90~31.90	1	42.1	71.3	2
SMDJ28A	SMDJ28CA	PFG	DFG	28.0	31.10~34.40	1	45.4	66.1	2
SMDJ30A	SMDJ30CA	PFK	DFK	30.0	33.30~36.80	1	48.4	62.0	2
SMDJ33A	SMDJ33CA	PFM	DFM	33.0	36.70~40.60	1	53.3	56.3	2
SMDJ36A	SMDJ36CA	PFP	DFP	36.0	40.00~44.20	1	58.1	51.6	2
SMDJ40A	SMDJ40CA	PFR	DFR	40.0	44.40~49.10	1	64.5	46.5	2
SMDJ43A	SMDJ43CA	PFT	DFT	43.0	47.80~52.80	1	69.4	43.2	2
SMDJ45A	SMDJ45CA	PFV	DFV	45.0	50.00~55.30	1	72.7	41.3	2
SMDJ48A	SMDJ48CA	PFX	DFX	48.0	53.30~58.90	1	77.4	38.8	2
SMDJ51A	SMDJ51CA	PFZ	DFZ	51.0	56.70~62.70	1	82.4	36.4	2
SMDJ54A	SMDJ54CA	PGE	DGE	54.0	60.00~66.30	1	87.1	34.4	2
SMDJ58A	SMDJ58CA	PGG	DGG	58.0	64.40~71.20	1	93.6	32.1	2
SMDJ60A	SMDJ60CA	PGK	DGK	60.0	66.70~73.70	1	96.8	31.0	2
SMDJ64A	SMDJ64CA	PGM	DGM	64.0	71.10~78.60	1	103.0	29.1	2
SMDJ70A	SMDJ70CA	PGP	DGP	70.0	77.80~86.00	1	113.0	26.5	2
SMDJ75A	SMDJ75CA	PGR	DGR	75.0	83.30~92.10	1	121.0	24.8	2
SMDJ78A	SMDJ78CA	PGT	DGT	78.0	86.70~95.80	1	126.0	23.8	2
SMDJ85A	SMDJ85CA	PGV	DGV	85.0	94.40~104.00	1	137.0	21.9	2
SMDJ90A	SMDJ90CA	PGX	DGX	90.0	100.00~111.00	1	146.0	20.5	2
SMDJ100A	SMDJ100CA	PGZ	DGZ	100.0	111.00~123.00	1	162.0	18.5	2
SMDJ110A	SMDJ110CA	PHE	DHE	110.0	122.00~135.00	1	177.0	16.9	2
SMDJ120A	SMDJ120CA	PHG	DHG	120.0	133.00~147.00	1	193.0	15.5	2
SMDJ130A	SMDJ130CA	PHK	DHK	130.0	144.00~159.00	1	209.0	14.4	2
SMDJ150A	SMDJ150CA	PHM	DHM	150.0	167.00~185.00	1	243.0	12.3	2
SMDJ160A	SMDJ160CA	PHP	DHP	160.0	178.00~197.00	1	259.0	11.6	2
SMDJ170A	SMDJ170CA	PHR	DHR	170.0	189.00~209.00	1	275.0	10.9	2
SMDJ180A	SMDJ180CA	HHT	IHT	180.0	201.00~222.00	1	292.0	10.3	2
SMDJ190A	SMDJ190CA	HHV	IHV	190.0	211.00~233.00	1	308.0	9.7	2
SMDJ200A	SMDJ200CA	HHX	IHX	200.0	224.00~247.00	1	324.0	9.3	2
SMDJ210A	SMDJ210CA	HHZ	IHZ	210.0	237.00~263.00	1	340.0	8.8	2
SMDJ220A	SMDJ220CA	HIE	IIE	220.0	246.00~272.00	1	356.0	8.4	2

Ratings and Characteristic Curves (T_A=25℃ unless otherwise noted)

Figure 1. Peak Pulse Power Rating Curve

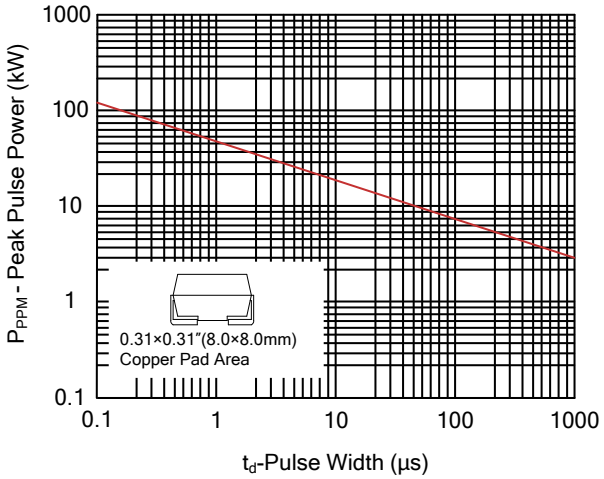

Figure 2. Pulse Derating Curve

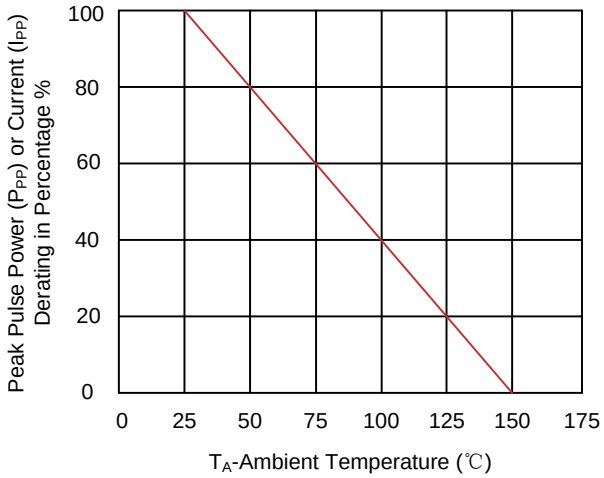

Figure 3. Pulse Waveform

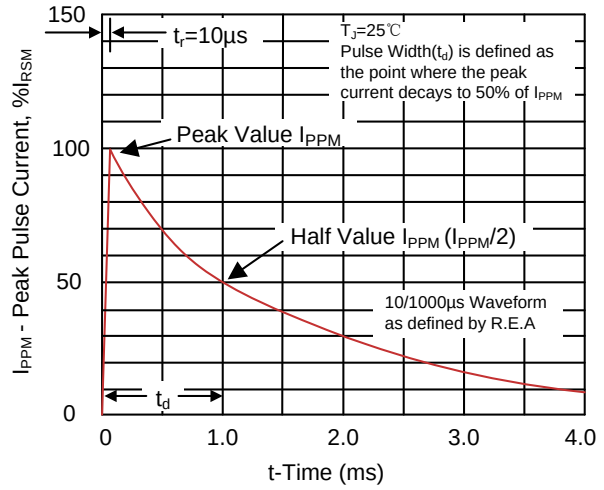

Figure 4. Typical Junction Capacitance

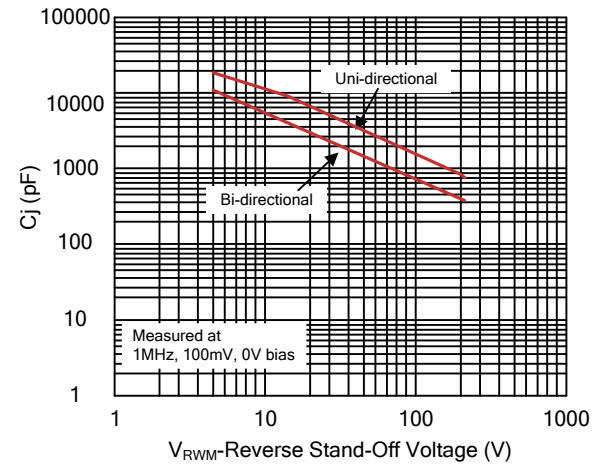

Figure 5. Steady State Power Dissipation Derating Curve

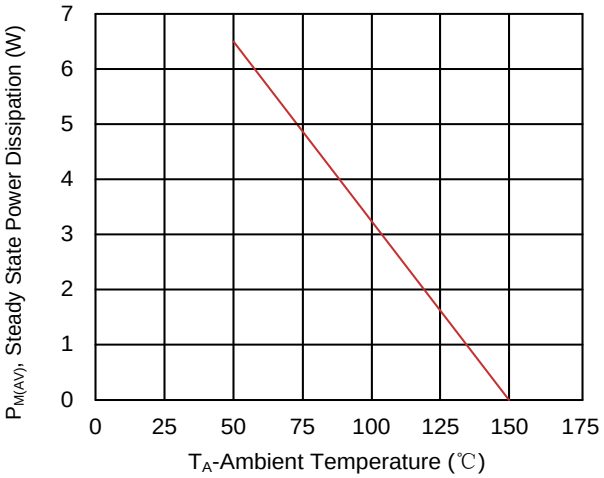

Figure 6. Maximum Non-Repetitive Forward Surge Current Uni-Directional Only

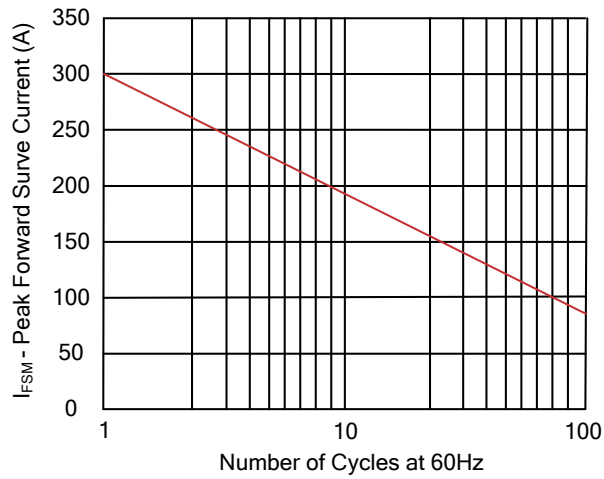

Recommended Soldering Conditions

Reflow Soldering

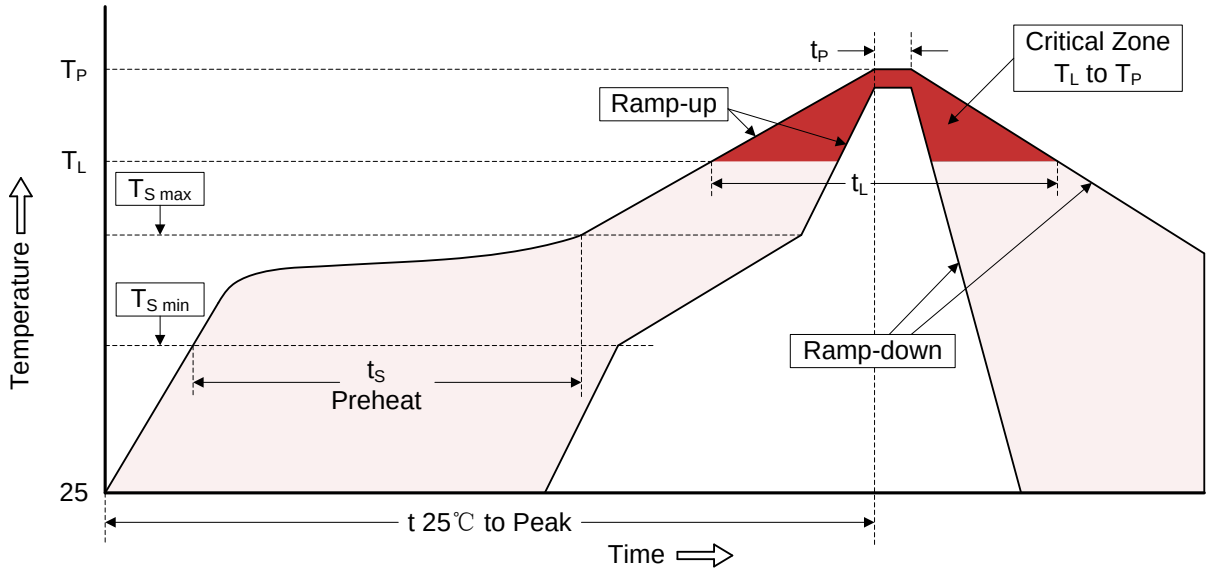

Recommended Conditions

Profile Feature	Pb-Free Assembly
Average ramp-up rate (T_L to T_P)	3℃/second max.
Preheat -Temperature Min ($T_{S\,min}$) -Temperature Max ($T_{S\,max}$) -Time (min to max) (t_S)	 150℃ 200℃ 60-180 seconds
$T_{S\,max}$ to T_L -Ramp-up Rate	 3℃/second max.
Time maintained above: -Temperature (T_L) -Time (t_L)	 217℃ 60-150 seconds
Peak Temperature (T_P)	260℃
Time within 5℃ of actual Peak Temperature (t_P)	20-40 seconds
Ramp-down Rate	6℃/second max.
Time 25℃ to Peak Temperature	8 minutes max.

Marking Code

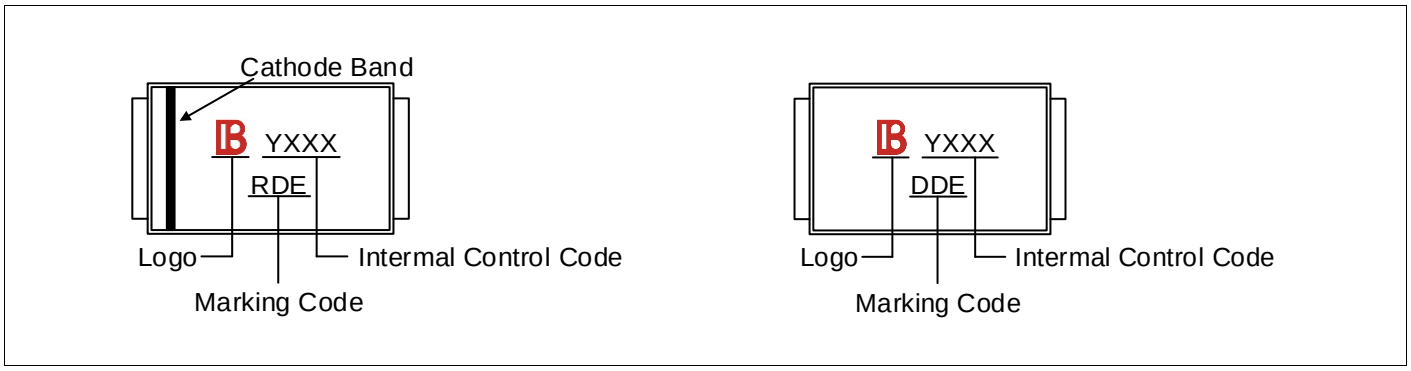

Part Number Code

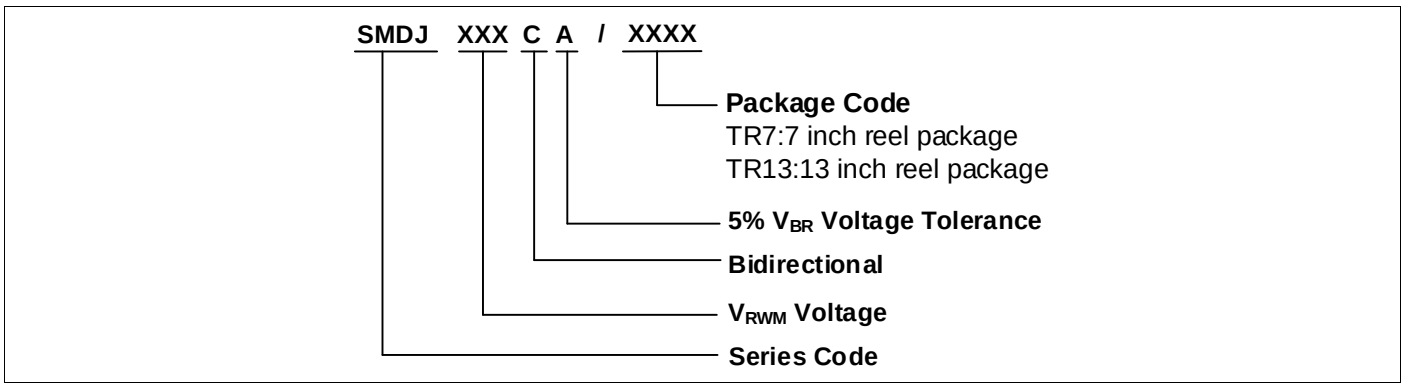

Ordering Code for Different Package

7 inch reel package: Add suffix " /TR7 " at the end of the part number, such as SMDJXXXCA/TR7
13 inch reel package: Add suffix " /TR13 " at the end of the part number, such as SMDJXXXCA/TR13

Packaging

Tape

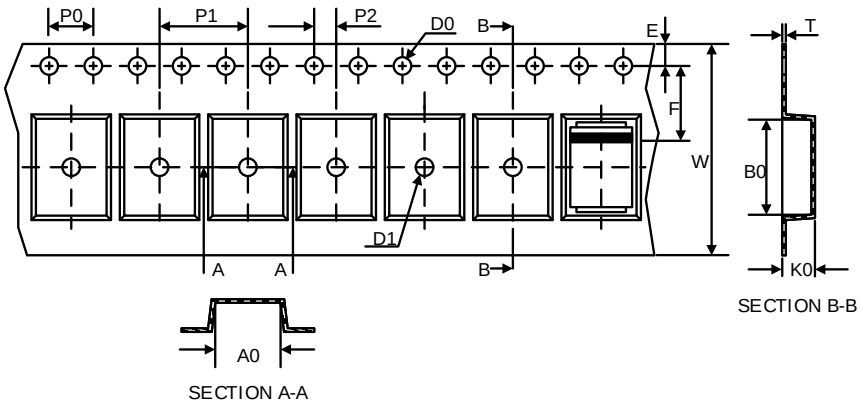

Symbol	Dimension (mm)
W	16.00±0.20
P0	4.00±0.10
P1	8.00±0.10
P2	2.00±0.10
D0	Φ1.5±0.10
D1	Φ1.5±0.10
E	1.75±0.10
F	7.50±0.10
A0	6.27±0.10
B0	8.30±0.10
K0	3.15±0.15
T	0.30±0.05

7” Reel

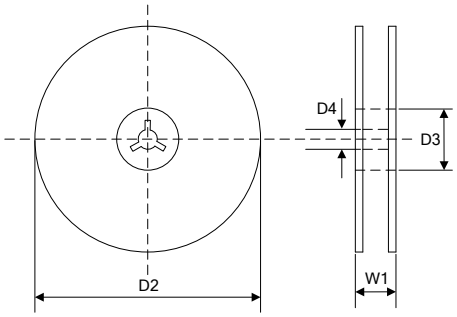

D2	Φ178.0±2.0
D3	Φ50.0Min.
D4	Φ13.0±0.5
W1	20.0±2.0
Quantity: 500PCS	

13” Reel

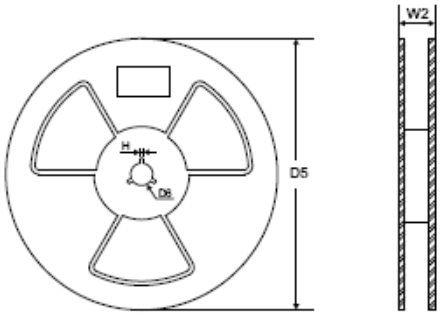

D5	Φ330.0±2.0
D6	Φ13.5±0.5
H	2.5±1.0
W2	20.0±2.0
Quantity: 3000PCS	

LEGAL DISCLAIMER

YAGEO, its distributors and agents (collectively, "YAGEO"), hereby disclaims any and all liabilities for any errors, inaccuracies or incompleteness contained in any product related information, including but not limited to product specifications, datasheets, pictures and/or graphics. YAGEO may make changes, modifications and/or improvements to product related information at any time and without notice.

YAGEO makes no representation, warranty, and/or guarantee about the fitness of its products for any particular purpose or the continuing production of any of its products. To the maximum extent permitted by law, YAGEO disclaims (i) any and all liability arising out of the application or use of any YAGEO product, (ii) any and all liability, including without limitation special, consequential or incidental damages, and (iii) any and all implied warranties, including warranties of fitness for a particular purpose, non -infringement and merchantability.

YAGEO products are designed for general purpose applications under normal operation and usage conditions. Please contact YAGEO for the applications listed below which require especially high reliability for the prevention of defects which might directly cause damage to the third party's life, body or property: Aerospace equipment (artificial satellite, rocket, etc.), Atomic energy-related equipment, Aviation equipment, Disaster prevention equipment, crime prevention equipment, Electric heating apparatus, burning equipment, Highly public information network equipment, data-processing equipment , Medical devices, Military equipment, Power generation control equipment, Safety equipment, Traffic signal equipment, Transportation equipment and Undersea equipment, or for any other application or use in which the failure of YAGEO products could result in personal injury or death, or serious property damage. Particularly **YAGEO Corporation and its affiliates do not recommend the use of commercial or automotive grade products for high reliability applications or manned space flight.**

Information provided here is intended to indicate product specifications only. YAGEO reserves all the rights for revising this content without further notification, as long as products are unchanged. Any product change will be announced by PCN.

Looking for pricing, stock, or lifecycle information?

Click below to explore more details on WIN SOURCE:

- View SMDJ60CA/TR13 on WIN SOURCE
- Yageo Information

Optimize Your Supply Chain with WIN SOURCE Solutions

- Global Sourcing Solution
- Obsolete Management
- Cost Control Management
- Shortage Management
- Alternative Solution
- Excess Inventory Management