THE DATASHEET OF

DM74ALS576AWM

www.win-source.net 0086-755-83957316

FAIRCHILD SEMICONDUCTOR™

October 1986
Revised February 2000

DM74ALS576A
Octal D-Type Edge-Triggered Flip-Flop with 3-STATE Outputs

General Description

These 8-bit registers feature totem-pole 3-STATE outputs designed specifically for driving highly-capacitive or relatively low-impedance loads. The high-impedance state and increased high-logic-level drive provide these registers with the capability of being connected directly to and driving the bus lines in a bus-organized system without need for interface or pull-up components. They are particularly attractive for implementing buffer registers, I/O ports, bidirectional bus drivers, and working registers.

The eight flip-flops of the DM74ALS576A are edge-triggered inverting D-type flip-flops. On the positive transition of the clock, the $\overline{Q}$ outputs will be set to the complement of the logic states that were set up at the D inputs.

A buffered output control input can be used to place the eight outputs in either a normal logic state (HIGH or LOW logic levels) or a high-impedance state. In the high-impedance state the outputs neither load nor drive the bus lines significantly.

The output control does not affect the internal operation of the flip-flops. That is, the old data can be retained or new data can be entered even while the outputs are OFF.

Features

- Switching specifications at 50 pF
- Switching specifications guaranteed over full temperature and V_{CC} range
- Advanced oxide-isolated, ion-implanted Schottky TTL process
- 3-STATE buffer-type outputs drive bus lines directly

Ordering Code:

Order Number	Package Number	Package Description
DM74ALS576AWM	M20B	20-Lead Small Outline Integrated Circuit (SOIC), JEDEC MS-013, 0.300 Wide
DM74ALS576AN	N20A	20-Lead Plastic Dual-In-Line Package (PDIP), JEDEC MS-001, 0.300 Wide

Devices also available in Tape and Reel. Specify by appending the suffix letter "X" to the ordering code.

Connection Diagram

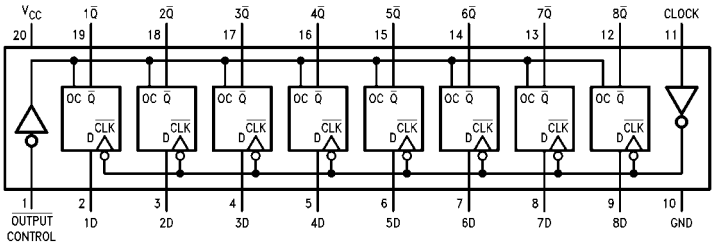

© 2000 Fairchild Semiconductor Corporation

Function Table

$\overline{\text{Output}}$ Control	Clock	D	Output $\overline{Q}$
L	↑	H	L
L	↑	L	H
L	L	X	$\overline{Q}_0$
H	X	X	Z

L = LOW State
H = HIGH State
X = Don't Care
↑ = Positive Edge Transition
Z = High Impedance State
$\overline{Q}_0$ = Previous Condition of $\overline{Q}$

Logic Diagram

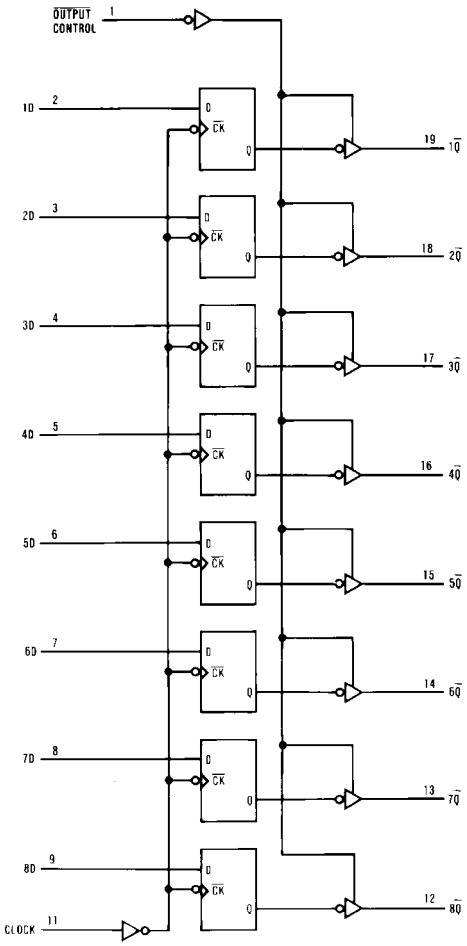

Absolute Maximum Ratings(Note 1)

Supply Voltage	7V
Input Voltage	7V
Voltage Applied to Disabled Output	5.5V
Operating Free Air Temperature Range	0°C to +70°C
Storage Temperature Range	–65°C to +150°C
Typical θ_{JA}	
N Package	56.0°C/W
M Package	75.0°C/W

Note 1: The "Absolute Maximum Ratings" are those values beyond which the safety of the device cannot be guaranteed. The device should not be operated at these limits. The parametric values defined in the Electrical Characteristics tables are not guaranteed at the absolute maximum ratings. The "Recommended Operating Conditions" table will define the conditions for actual device operation.

Recommended Operating Conditions

Symbol	Parameter		Min	Nom	Max	Units
V_{CC}	Supply Voltage		4.5	5	5.5	V
V_{IH}	HIGH Level Input Voltage		2			V
V_{IL}	LOW Level Input Voltage				0.8	V
I_{OH}	HIGH Level Output Current				–2.6	mA
I_{OL}	LOW Level Output Current				24	mA
f_{CLOCK}	Clock Frequency		0		30	MHz
t_W	Width of Clock Pulse	HIGH	16.5			ns
		LOW	16.5			ns
t_{SU}	Data Setup Time (Note 2)		15↑			ns
t_H	Data Hold Time (Note 2)		0↑			ns
T_A	Free Air Operating Temperature		0		70	°C

Note 2: The (↑) arrow indicates the positive edge of the Clock is used for reference.

Electrical Characteristics

over recommended operating free air temperature range. All typical values are measured at V_{CC} = 5V, T_A = 25°C.

Symbol	Parameter	Conditions		Min	Typ	Max	Units
V_{IK}	Input Clamp Voltage	V_{CC} = 4.5V, I_I = –18 mA				–1.2	V
V_{OH}	HIGH Level Output Voltage	V_{CC} = 4.5V, V_{IL} = V_{IL} Max	I_{OH} = Max	2.4	3.2		V
		V_{CC} = 4.5V to 5.5V	I_{OH} = –400 µA	V_{CC} – 2			V
V_{OL}	LOW Level Output Voltage	V_{CC} = 4.5V, V_{IH} = 2V	I_{OL} = 24 mA		0.35	0.5	V
I_I	Input Current @ Maximum Input Voltage	V_{CC} = 5.5V, V_{IH} = 7V				0.1	mA
I_{IH}	HIGH Level Input Current	V_{CC} = 5.5V, V_{IH} = 2.7V				20	µA
I_{IL}	LOW Level Input Current	V_{CC} = 5.5V, V_{IL} = 0.4V				–0.2	mA
I_O	Output Drive Current	V_{CC} = 5.5V, V_O = 2.25V		–30		–112	mA
I_{OZH}	OFF-State Output Current HIGH Level Voltage Applied	V_{CC} = 5.5V, V_{IH} = 2V, V_O = 2.7V				20	µA
I_{OZL}	OFF-State Output Current LOW Level Voltage Applied	V_{CC} = 5.5V, V_{IH} = 2V, V_O = 0.4V				–20	µA
I_{CC}	Supply Current	V_{CC} = 5.5V, Outputs OPEN	Outputs HIGH		10	18	mA
			Outputs LOW		15	24	mA
			Outputs Disabled		16	30	mA

Switching Characteristics

over recommended operating free air temperature range

Symbol	Parameter	Conditions	From	To	Min	Max	Units
f_{MAX}	Maximum Clock Frequency	V_{CC} = 4.5V to 5.5V			30		MHz
t_{PLH}	Propagation Delay Time LOW-to-HIGH Level Output	R_L = 500Ω C_L = 50 pF	Clock	Any $\overline{Q}$	4	14	ns
t_{PHL}	Propagation Delay Time HIGH-to-LOW Level Output		Clock	Any $\overline{Q}$	4	14	ns
t_{PZH}	Output Enable Time to HIGH Level Output		Output Control	Any $\overline{Q}$	4	18	ns
t_{PZL}	Output Enable Time to LOW Level Output		Output Control	Any $\overline{Q}$	4	18	ns
t_{PHZ}	Output Disable Time from HIGH Level Output		Output Control	Any $\overline{Q}$	2	10	ns
t_{PLZ}	Output Disable Time from LOW Level Output		Output Control	Any $\overline{Q}$	3	15	ns

Physical Dimensions inches (millimeters) unless otherwise noted

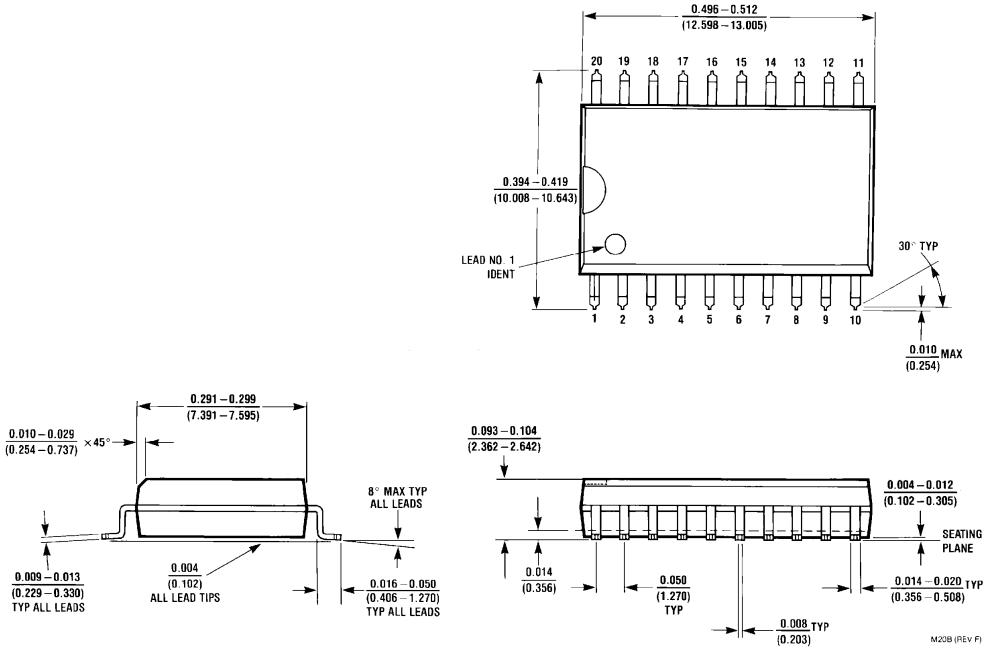

20-Lead Small Outline Integrated Circuit (SOIC), JEDEC MS-013, 0.300 Wide
Package Number M20B

Physical Dimensions inches (millimeters) unless otherwise noted (Continued)

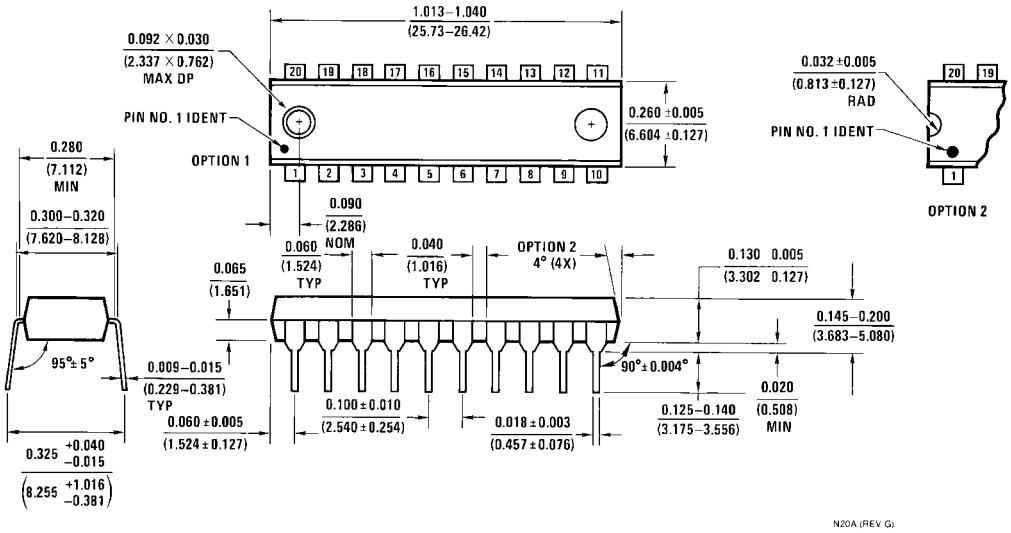

20-Lead Plastic Dual-In-Line Package (PDIP), JEDEC MS-001, 0.300 Wide
Package Number N20A

Fairchild does not assume any responsibility for use of any circuitry described, no circuit patent licenses are implied and Fairchild reserves the right at any time without notice to change said circuitry and specifications.

LIFE SUPPORT POLICY

FAIRCHILD'S PRODUCTS ARE NOT AUTHORIZED FOR USE AS CRITICAL COMPONENTS IN LIFE SUPPORT DEVICES OR SYSTEMS WITHOUT THE EXPRESS WRITTEN APPROVAL OF THE PRESIDENT OF FAIRCHILD SEMICONDUCTOR CORPORATION. As used herein:

1. Life support devices or systems are devices or systems which, (a) are intended for surgical implant into the body, or (b) support or sustain life, and (c) whose failure to perform when properly used in accordance with instructions for use provided in the labeling, can be reasonably expected to result in a significant injury to the user.
2. A critical component in any component of a life support device or system whose failure to perform can be reasonably expected to cause the failure of the life support device or system, or to affect its safety or effectiveness.

www.fairchildsemi.com

Looking for pricing, stock, or lifecycle information?

Click below to explore more details on WIN SOURCE:

- View DM74ALS576AWM on WIN SOURCE
- Fairchild/ON Semiconductor Information

Optimize Your Supply Chain with WIN SOURCE Solutions

- Global Sourcing Solution
- Obsolete Management
- Cost Control Management
- Shortage Management
- Alternative Solution
- Excess Inventory Management