THE DATASHEET OF

A3904ECGTR

www.win-source.net 0086-755-83957316

Low Voltage Voice Coil Motor Driver

Discontinued Product

This device is no longer in production. The device should not be purchased for new design applications. Samples are no longer available.

Date of status change: March 4, 2013

Recommended Substitutions:

For existing customer transition, and for new customers or new applications, contact Allegro Sales.

NOTE: For detailed information on purchasing options, contact your local Allegro field applications engineer or sales representative.

Allegro MicroSystems, Inc. reserves the right to make, from time to time, revisions to the anticipated product life cycle plan for a product to accommodate changes in production capabilities, alternative product availabilities, or market demand. The information included herein is believed to be accurate and reliable. However, Allegro MicroSystems, Inc. assumes no responsibility for its use; nor for any infringements of patents or other rights of third parties which may result from its use.

Low Voltage Voice Coil Motor Driver

Features and Benefits

- Fixed I²C logic thresholds
- 8-bit D-to-A converter
- 500 µA resolution
- Low voltage I²C serial interface
- Low current-draw sleep mode
- 2.4 to 5.5 V operation
- 1.1 mm × 0.7 mm, 0.5 mm maximum overall height WLCSP

Package: 6-ball wafer-level chip scale package (CG)

1.1 mm × 0.7 mm

Not to scale

Description

The A3904 is a voice coil motor (VCM) driver, with an I²C-compatible serial interface. Designed for camera autofocus and zoom applications, this high accuracy digital IC is provided in a WLCSP package ideal for portable devices. Its operating voltage range is 2.4 to 5.5 V, and its maximum output current is 127 mA.

Output current is programmed via the I²C interface, in 500 uA increments, with clock rates up to 400 kHz. I²C inputs set the internal D-to-A converter output voltage that is the reference for linear current control via a MOSFET output sink transistor. To conserve battery power, a logic low signal on the SLEEPZ input disables the output MOSFET and reduces the supply current to <0.5 µA.

A3904 internal protection features include thermal shutdown and undervoltage lockout. Logic input levels are independent of the supply voltage. The operating temperature range is –40°C to 85°C.

The A3904 is available in a bumped wafer level chip scale package (WLCSP) (suffix CG).

Functional Block Diagram

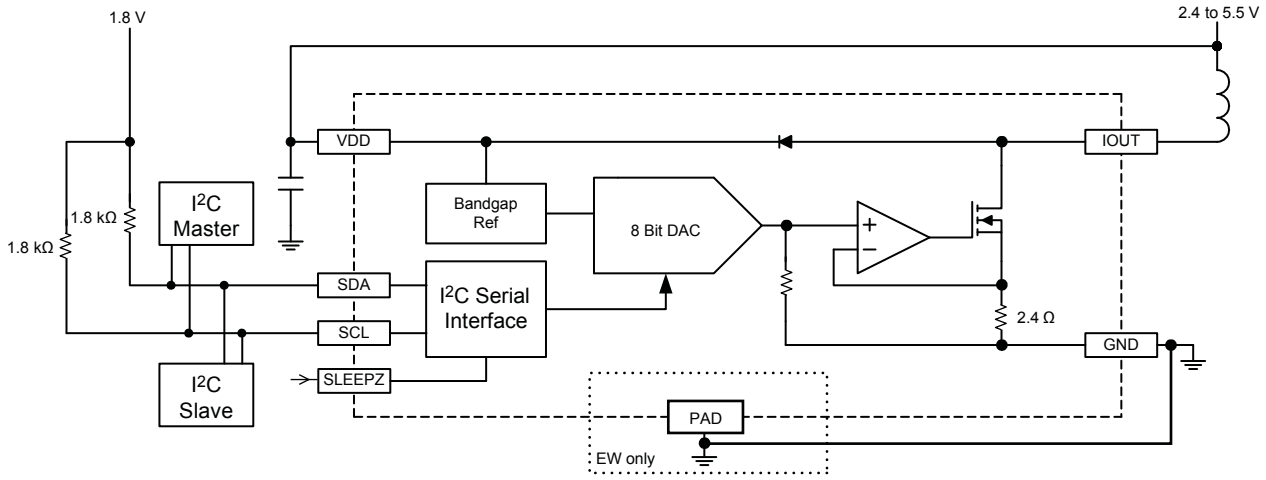

Selection Guide

Part Number	Packing	Package	Pb-Free
A3904ECGTR	4000 pieces per reel	Bumped wafer-level chip-scale package (WLCSP)	Pb-free chip with high-temperature solder balls (RoHS compliant)

Absolute Maximum Ratings

Characteristic	Symbol	Notes	Rating	Units
Supply Voltage	V_{DD}		6	V
Logic Input Voltage Range	V_{IN}		–0.3 to V_{DD}+0.3	V
Operating Ambient Temperature	T_A	Range E	–40 to 85	ºC
Maximum Junction Temperature	T_J(max)		150	ºC
Storage Temperature	T_{stg}		–55 to 150	ºC

Pin-out Diagram
CG Package

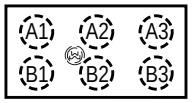

Orientation mark
on bump side

Terminal List

Number	Name	Description
A1	SDA	I²C data input/output
A2	SCL	I²C clock
A3	VDD	Power supply
B3	GND	Ground
B2	IOUT	Sink drive output
B1	SLEEPZ	Standby mode control

ELECTRICAL CHARACTERISTICS Valid at T_A= 25°C, V_{DD} = 2.4 to 5.5 V, unless otherwise noted

Characteristics	Symbol	Test Conditions	Min.	Typ.	Max.	Units
General						
Supply Current	I_{DD}		–	0.5	2	mA
		Sleep mode (SLEEPZ = Low)	–	<100	500	nA
UVLO Enable Threshold	$V_{UV(th)}$	V_{DD} rising	–	2.1	2.395	V
UVLO Hysteresis	$V_{UV(hys)}$		100	–	–	mV
Thermal Shutdown Temperature	T_{JTSD}	Temperature increasing	–	165	–	°C
Thermal Shutdown Hysteresis	$.T_{JTSD(hys)}$	$T_{JTSD(hys)} = T_{JTSD} – T_{J(recover)}$	–	15	–	°C
Power-Up Delay	$t_{d(on)}$		–	10	–	µs
D-to-A Converter						
Resolution	Res	Target = 500 µA / LSB	–	8	–	bit
LSB Relative Accuracy	INL	Code = 16 to 255, Endpoint method	–	±4	–	LSB
LSB Differential Nonlinearity	DNL	Guaranteed monotonic	–	–	±1	LSB
Maximum Output Current	I_{max}	Code = 255	–	127.5	–	mA
Gain Error	err_A	T_J = 25°C, Code 16 to 255, V_{DD} = 2.6 to 3.0 V	–10	<3	10	%FS
Gain Error Drift*	Δerr_A	T_J = –40°C to 125°C	–	0.2	–	LSB/°C
Offset Error	I_{errOS}	Code = 1	0	1	5	mA
		Code = 16	0.5	–	–	mA
Output						
Output Voltage Range	V_{OUT}		0.500	–	V_{DD}–0.1	V
Output On Resistance	$R_{DS(on)}$	$R_{SENSE} + R_{SINK}$, I_{OUT} = 127.5 mA	–	3	–	Ω
I²C Interface						
Bus Free Time Between Stop and Start	t_{BUF}		1.3	–	–	µs
Hold Time Start Condition	t_{hdSTA}		0.6	–	–	µs
Setup Time for Repeated Start Condition	t_{suSTA}		0.6	–	–	µs
SCL Low Time	t_{LOW}		1.3	–	–	µs
SCL High Time	t_{HIGH}		0.6	–	–	µs
Data Setup Time	t_{suDAT}		100	–	–	ns
Data Hold Time	t_{hdDAT}		0		900	ns
Setup Time for Stop Condition	t_{suSTO}		0.6	–	–	µs
Logic Input Low Level (SDA, SCL pins)	V_{IL}		–	–	0.84	V
Logic Input High Level (SDA, SCL pins)	V_{IH}		1.26	–	–	V
Input Hysteresis (SDA, SCL pins)	V_{hys}		–	100	–	mV
SLEEPZ Input Low Level	V_{inSLP}		–	–	0.7	V
SLEEPZ Input High Level	V_{inSLP}		1.5	–	–	V
Logic Input Current	I_{IN}	V_{IN} = 0 V to V_{DD}	–1	0	1	µA
Output Voltage (SDA pin)	V_{OL}	I_{LOAD} = 1.5 mA	–	–	0.36	V
Clock Frequency (SCL pin)	f_{CLK}		–	–	400	kHz
Output Fall Time (SDA pin)	t_{fO}	V_{IH} to V_{IL}	–	–	250	ns

*Guaranteed by design and characterization, not production tested

I²C Interface Timing Diagram

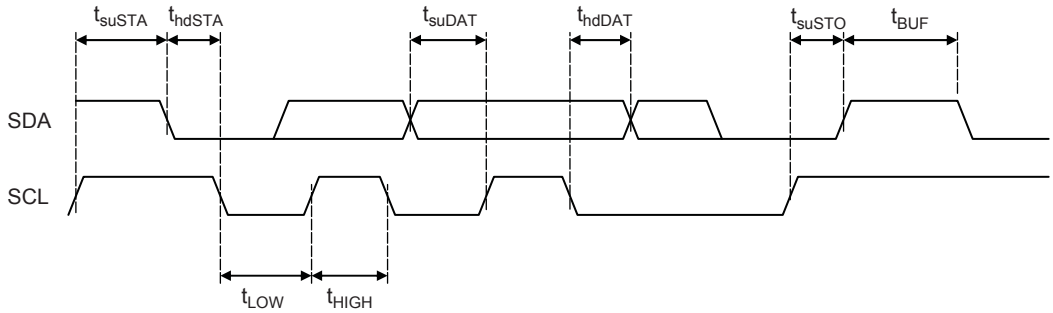

Write Register Bit Definition and Timing Diagram

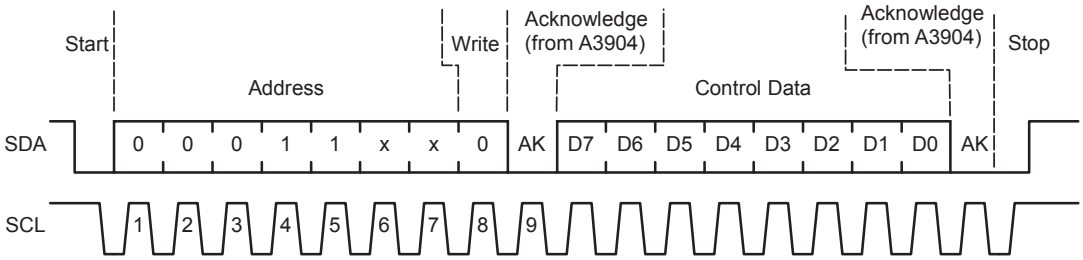

I²C Control Register Bit Definition

Bit	Name	Function
0	D0	DAC LSB
1	D1	
2	D2	
3	D3	
4	D4	
5	D5	
6	D6	
7	D7	DAC MSB

A3904 Slave Address Bit Definition

Bit								Operation
0	1	2	3	4	5	6	7	
0	0	0	1	1	x	X	1	Read
							0	Write

Functional Description

The A3904 output current is controlled by programming the D-to-A converter value via the I²C serial port. The target output current can be calculated by:

$$I_{OUT} = \text{DAC} \times 500\ \mu\text{A}\ ,$$

where DAC = 1 to 255. Code = 0 is a disable state for the output sink drive. The DAC will be set to code = 0 upon power-up or a fault condition on V_{DD}.

SLEEPZ A logic low input disables all of the internal circuitry and prevents the IC from draining battery power.

Output Range The voltage on the IOUT pin should be greater than 500 mV to guarantee the accuracy and linearity of the programmed current. The output voltage is a function of the battery voltage, motor resistance, and the programmed load current.

Clamp Diode When the output is turned off, the load inductance causes the output voltage to rise. A clamp diode, from IOUT to VDD, is integrated in the IC to ensure that the output voltage remains at a safe level.

I²C Interface This is a serial interface that uses two bus lines, SCL and SDA, to access the internal Control registers. Data is exchanged between a microcontroller (master) and the A3904 (slave). The clock input to SCL is generated by the master, while the SDA line functions as either an input or an open drain output, depending on the direction of the data. The I²C input thresholds do not depend on the V_{DD} voltage of the A3904. The levels are fixed at approximately 1 V. The fixed levels allow the SDA and SCL lines to be pulled-up to a different logic level than the V_{DD} supply of the 3904.

Timing Considerations The control sequence of the communication through the I²C interface is composed of several steps in the following sequence:

1. Start Condition. Defined by a negative edge on the SDA line, while SCL is high.
2. Address Cycle. 7 bits of address, plus 1 bit to indicate write (0) or read (1), and an acknowledge bit. The address setting is 0x18, 0x1A, 0x1C or 0x1E.
3. Data Cycles. Write 8 bits of data that address the internal Control register, followed by an acknowledge bit.
4. Stop Condition. Defined by a positive edge on the SDA line, while SCL is high.

Except to indicate a Start or Stop condition, SDA must be stable while the clock is high. SDA can only be changed while SCL is low. It is possible for the Start or Stop condition to occur at any time during a data transfer. The A3904 always responds by resetting the data transfer sequence.

The Read/Write bit is set low to indicate a write cycle. Multiple writes are allowed before issuing a Stop condition. There are no readback functions incorporated into the A3904.

The master monitors for an acknowledge pulse to determine if the slave device is responding to the address byte sent to the A3904. When the A3904 decodes the 7-bit address field as a valid address, it responds by pulling SDA low during the ninth clock cycle.

During a data write from the master, the A3904 pulls SDA low during the clock cycle that follows the data byte, in order to indicate that the data has been successfully received.

After sending either an address byte or a data byte, the master device must release the SDA line before the ninth clock cycle, in order to allow this handshaking to occur.

Application Information

Headroom The current may not reach the programmed level if there is not adequate headroom in the output circuit. The IC output voltage must be over 500 mV to guarantee normal linear operation. V_{DD}, I_{LOAD}, and R_{LOAD} can be adjusted to ensure that the device operates in the linear range.

If the equation shown below is not satisfied, the load current will be limited by the series impedance, and may not reach the programmed level

$$V_{DD}(\text{min}) - R_{LOAD}(\text{max}) \times I_{OUT}(\text{max}) \geq 500 \text{ mV} \quad .$$

I_{OUT} Errors

Relative accuracy (INL) This error is calculated by measuring the worse case deviation from a straight line, defined from end points. The straight line end points are defined by the actual measured values at Code = 16 and Code = 255. See figure 1.

Differential nonlinearity (DNL) A measure of the monotonicity of the D-to-A converter. The slope of the line must always be positive for each incremental step, according to the following formula:

$$\text{DNL} = (I_{OUT(n+1)} - I_{OUT(n)}) / \text{LSB} - 1 \ \ (\text{LSB}) \quad .$$

where *n* is in the range 16 to 255.

Offset error The measured output current at input Code = 16, compared to the ideal value according to the transfer function (8 mA).

Gain Error The difference in the slopes of the ideal transfer function and the actual transfer function. The gain error is calculated by subtracting out the offset error, at Code = 16, from the actual transfer function. This calculated value is compared to the ideal transfer function and reported as a percentage of the ideal full scale value (127.5 mA). See figure 2.

Gain Error Drift The change in slope of the transfer function due to temperature, expressed as LSB/°C.

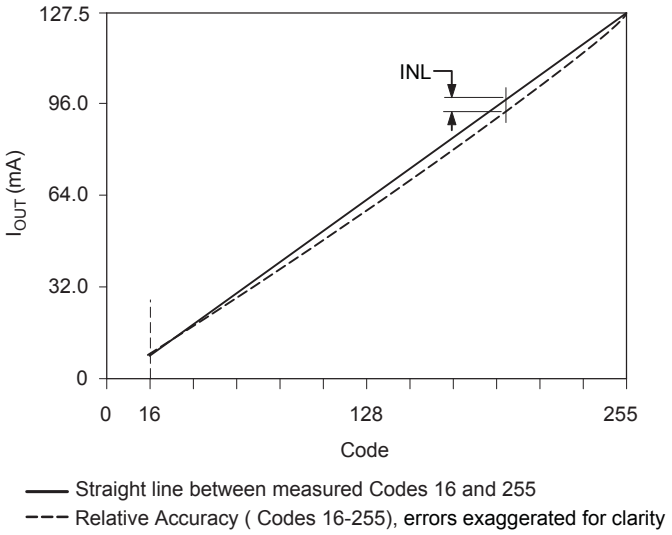

Figure 1. Relative accuracy error

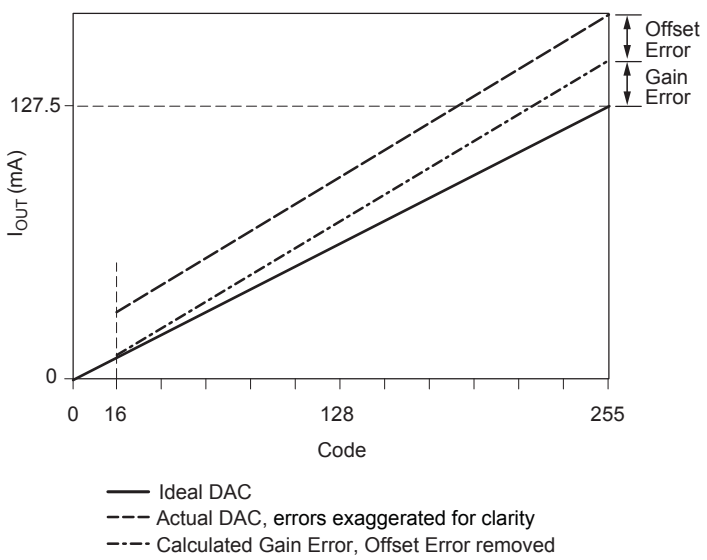

Figure 2. Gain error

CG Package, 6-Bump WLCSP

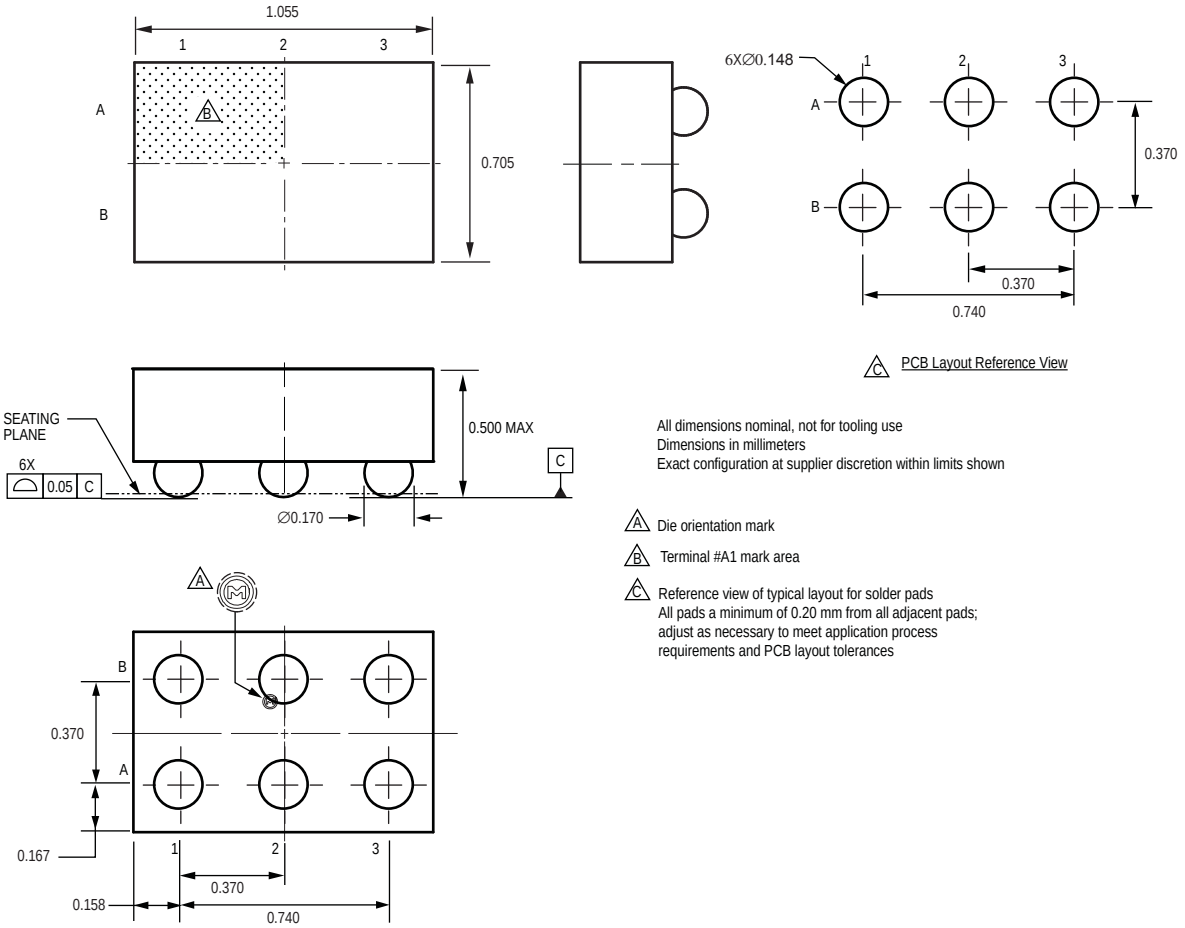

Copyright ©2007-2010, Allegro MicroSystems, Inc.

The products described here are manufactured under one or more U.S. patents or U.S. patents pending.

Allegro MicroSystems, Inc. reserves the right to make, from time to time, such departures from the detail specifications as may be required to permit improvements in the performance, reliability, or manufacturability of its products. Before placing an order, the user is cautioned to verify that the information being relied upon is current.

Allegro's products are not to be used in life support devices or systems, if a failure of an Allegro product can reasonably be expected to cause the failure of that life support device or system, or to affect the safety or effectiveness of that device or system.

The information included herein is believed to be accurate and reliable. However, Allegro MicroSystems, Inc. assumes no responsibility for its use; nor for any infringement of patents or other rights of third parties which may result from its use.

For the latest version of this document, visit our website:

www.allegromicro.com

Looking for pricing, stock, or lifecycle information?

Click below to explore more details on WIN SOURCE:

- View A3904ECGTR on WIN SOURCE
- Allegro MicroSystems, LLC Information

Optimize Your Supply Chain with WIN SOURCE Solutions

- Global Sourcing Solution
- Obsolete Management
- Cost Control Management
- Shortage Management
- Alternative Solution
- Excess Inventory Management