THE DATASHEET OF

PSK-15D-12

www.win-source.net 0086-755-83957316

CUI INC
a bel group

SERIES: PSK-15D | **DESCRIPTION:** INTERNAL AC-DC POWER SUPPLY

FEATURES

- wide input range (85 ~ 305 Vac)
- wide operating temperature range (-40 to +85 C)
- Class B emissions
- certified to 62368, 61558, and 60335 safety standards
- designed to meet 60601 medical safety standard (2xMOPP)
- over voltage, over current, short circuit protections
- input over voltage category III for fixed installations

MODEL	output voltage (Vdc)	output current max (A)	output power max (W)	ripple and noise max (mVp-p)	efficiency typ (%)
PSK-15D-3	3.3	4.0	13.2	120	82
PSK-15D-5	5	3.0	15.0	120	85
PSK-15D-9	9	1.67	15.0	120	84
PSK-15D-12	12	1.25	15.0	120	85
PSK-15D-15	15	1.0	15.0	120	85
PSK-15D-24	24	0.625	15.0	120	86

Notes: 1. At full load, nominal input, 20 MHz bandwidth oscilloscope, with output capacitors outlined in Figure/Table 1 below.
2. At 230 Vac input.
3. All specifications are measured at Ta=25°C, humidity <75%, nominal input voltage, and rated output load unless otherwise specified.

PART NUMBER KEY

PSK - 15D - XX - X

- PSK - 15D: Base Number
- XX: Output Voltage
- X: Mounting Style:
  blank = board mount
  T = chassis mount
  DIN = DIN-rail mount

INPUT

parameter	conditions/description	min	typ	max	units
voltage	ac input dc input	85 100		305 430	Vac Vdc
frequency		47		63	Hz
current	at 115 Vac at 230 Vac			0.45 0.30	A A
inrush current	at 230 Vac		60		A
leakage current	at 277 Vac/50 Hz			0.1	mA
no load power consumption	3.3, 5, 9, 12, 15 Vdc output models 24 Vdc output model			0.1 0.12	W W

OUTPUT

parameter	conditions/description	min	typ	max	units
capacitive load	3.3 Vdc output model 5 Vdc output model 9 Vdc output model 12 Vdc output model 15 Vdc output model 24 Vdc output model			6,600 5,000 3,000 2,000 1,500 680	µF µF µF µF µF µF
output voltage accuracy			±2		%
line regulation	at full load		±0.5		%
load regulation	0~100% load		±1.0		%
hold-up time	at 115 Vac at 230 Vac		10 55		ms ms
switching frequency			65		kHz

PROTECTIONS

parameter	conditions/description	min	typ	max	units
over voltage protection	clamp or hiccup 3.3 & 5 Vdc output models 9 Vdc output model 12 & 15 Vdc output models 24 Vdc output model			 7.5 15 20 30	 V V V V
over current protection	auto recovery	110			%
short circuit protection	continuous, auto recovery, hiccup				

SAFETY & COMPLIANCE

parameter	conditions/description	min	typ	max	units
isolation voltage	input to output, 1 min., <5mA	4,200			Vac
safety approvals	certified to 62368: IEC, EN, UL/cUL certified to 60335: EN certified to 61558: EN designed to meet 60601: IEC, EN, UL/cUL				
safety class	Class II				
EMI/EMC	CISPR32/EN 55032 CLASS B CISPR11/EN 55011 CLASS B EN 55014-1				
ESD	IEC/EN 61000-4-2 Contact ±8KV perf. Criteria B IEC/EN 55014-2 perf. Criteria B				
radiated immunity	IEC/EN 61000-4-3 10V/m perf. Criteria A IEC/EN 55014-2 perf. Criteria A				
EFT/burst	IEC/EN 61000-4-4 ±2KV perf. Criteria B IEC/EN 61000-4-4 ±4KV (See Fig.2 for recommended circuit) perf. Criteria B IEC/EN 55014-2 perf. Criteria B				

SAFETY & COMPLIANCE

surge	IEC/EN 61000-4-5 line to line ±1KV perf. Criteria B IEC/EN 61000-4-5 line to line ±2KV (See Fig.2 for recommended circuit) perf. Criteria B IEC/EN 55014-2 perf. Criteria B		
conducted immunity	IEC/EN 61000-4-6 10Vr.m.s perf. Criteria A IEC/EN 55014-2 perf. Criteria A		
voltage dips and interruption	IEC/EN 61000-4-11 0%, 70% perf. Criteria B IEC/EN 55014-2 perf. Criteria B		
MTBF	MIL-HDBK-217F at 25°C	3,200,000	hours
RoHS	yes		

ENVIRONMENTAL

parameter	conditions/description	min	typ	max	units
operating temperature		-40		85	°C
storage temperature		-40		85	°C
storage humidity		0		95	%

SOLDERABILITY

parameter	conditions/description	min	typ	max	units
wave soldering	5~10 seconds max	255	260	265	°C
hand soldering	3~5 seconds max	350	360	370	°C

MECHANICAL

parameter	conditions/description	min	typ	max	units
dimensions	DIP: 47.60 x 26.80 x 23.50 chassis mount: 76.00 x 31.50 x 32.30 DIN-rail: 76.00 x 31.50 x 36.90				mm mm mm
weight	DIP chassis mount DIN-rail		48 68 88		g g g
case material	lack plastic, flame-retardant and heat-resistant (UL94V-0)				

MECHANICAL DRAWING

units: mm [inch]
pin diameter tolerance: ±0.10 [±0.004]
tolerance: ±0.50 [±0.020]

PIN CONNECTIONS	
PIN	Function
1	AC(L)
2	AC(N)
3	-Vo
4	+Vo
5	no pin

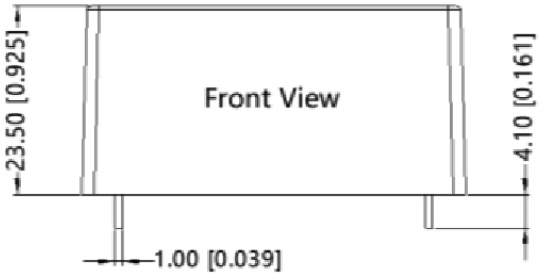

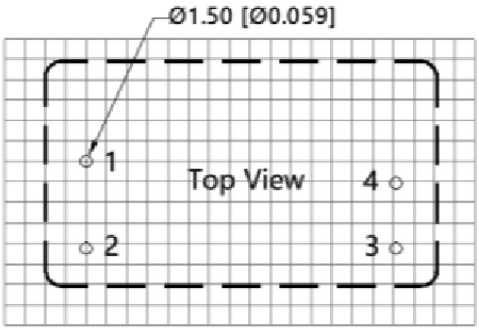

Note: Grid 2.54*2.54mm

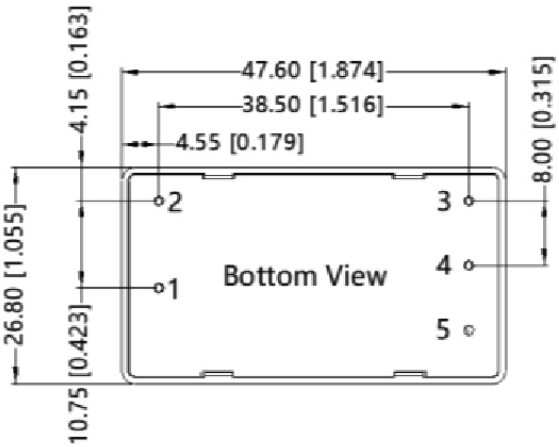

MECHANICAL DRAWING

units: mm [inch]
wire range: 24~12 AWG
tightening torque: Max 0.4 N·m
tolerance: ±1.0 [±0.039]

PIN CONNECTIONS	
PIN	Function
1	AC(N)
2	AC(L)
3	-Vo
4	+Vo

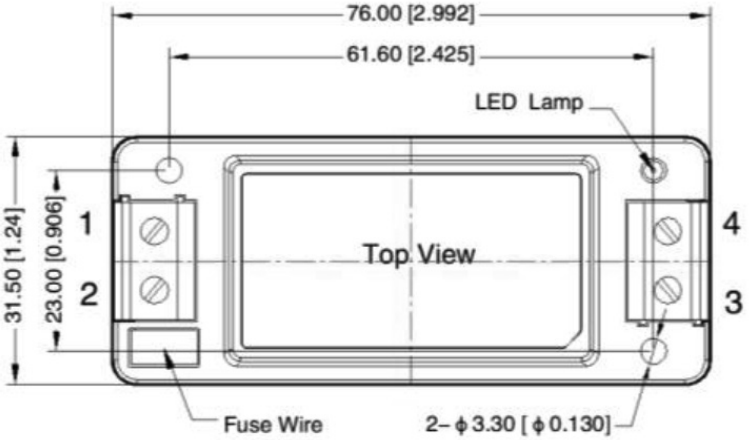

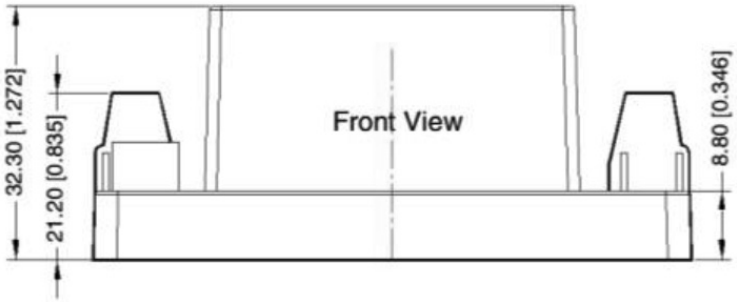

units: mm [inch]
wire range: 24~12 AWG
tightening torque: Max 0.4 N·m
mounting rail: TS35, must be connected to safety ground
tolerance: ±1.0 [±0.039]

PIN CONNECTIONS	
PIN	Function
1	AC(N)
2	AC(L)
3	-Vo
4	+Vo

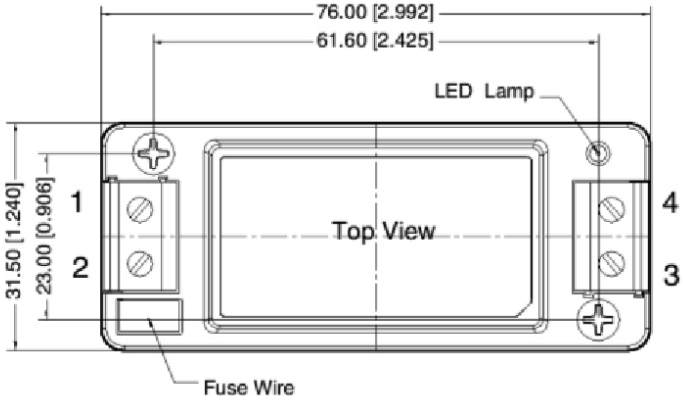

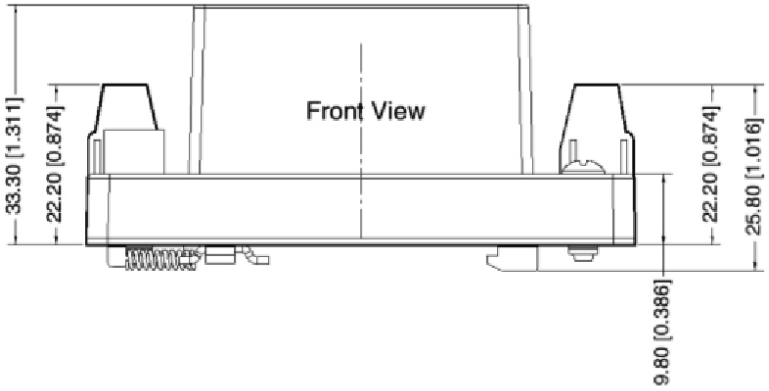

APPLICATION DESIGN REFERENCE

Figure 1

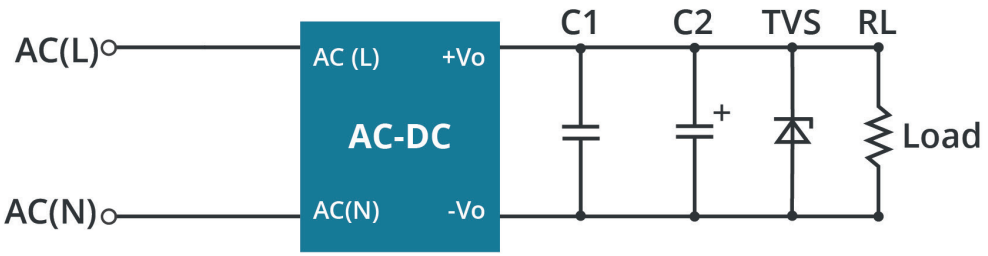

Table 1

Part No.	C1(μF)	C2(μF)	TVS
PSK-15D-3	1μF/50V	220μF/16V	SMBJ7.0A
PSK-15D-5		220μF/16V	SMBJ7.0A
PSK-15D-9		100μF/25V	SMBJ12A
PSK-15D-12		100μF/25V	SMBJ20A
PSK-15D-15		100μF/25V	SMBJ20A
PSK-15D-24		100uF/35V	SMBJ30A

Note: 2A / 300V, slow-blow fuse integrated into unit.

Output Filtering Components:
An electrolytic capacitor with high frequency operation, low ESR, and at least 20% margin on rated output voltage is recommended for C2. C1 should be a ceramic capacitor and the TVS will help protect downstream electronics in the unlikely event of converter failure.

EMC RECOMMENDED CIRCUIT

Figure 2
EMC APPLICATION CIRCUIT WITH HIGHER REQUIREMENTS

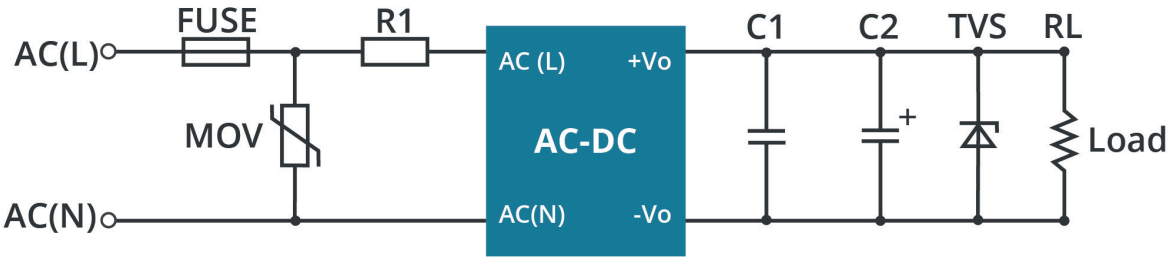

Table 2

Components	Recommended Value
FUSE	3.15A/300V, slow-blow, required
MOV	S14K350
R1	6.8Ω/3W

EMC RECOMMENDED CIRCUIT (CONTINUED)

Figure 3
RECCOMENDED CIRCUIT FOR CLASS I EQUIPMENT

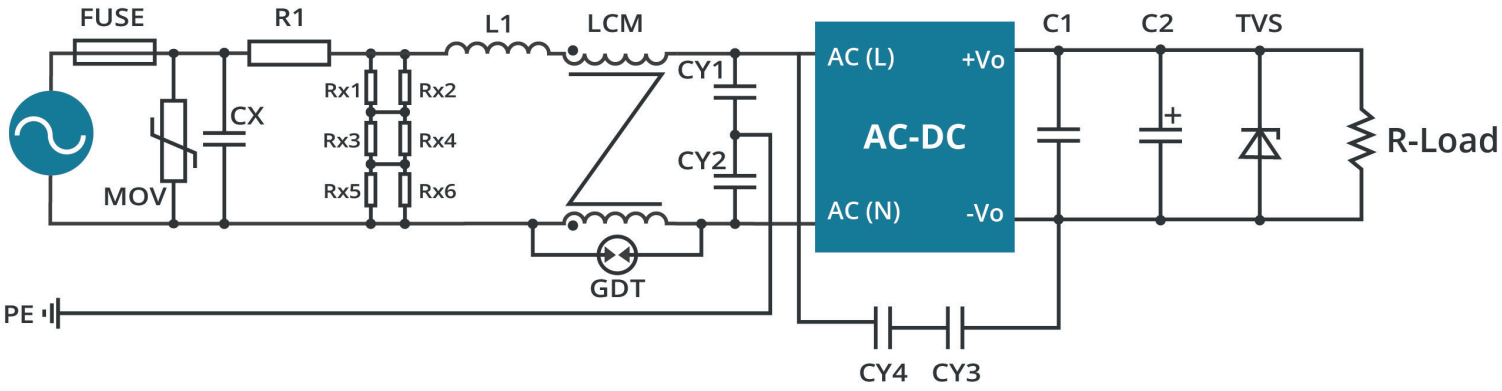

Recommended when the output terminal of the product needs to be connected to PE or connected to PE through a Y capacitor

Table 3

Components	Recommended Value
FUSE	3.15A/300V, slow-blow, required
MOV	S14K350
CX	334K/305Vac
R1	12Ω/5W (wire-wound resistor, required)
L1	1.2mH/0.5A
CY1/CY2	2.2nF/400Vac
CY3/CY4	1nF/400Vac
GDT	300V/1KA
LCM	20mH

Note: Rx1/Rx2/Rx3/Rx4/Rx5/Rx6 is the bleeder resistance of CX, and the recommended resistance value is 1.5MΩ/150Vdc.

DERATING CURVE

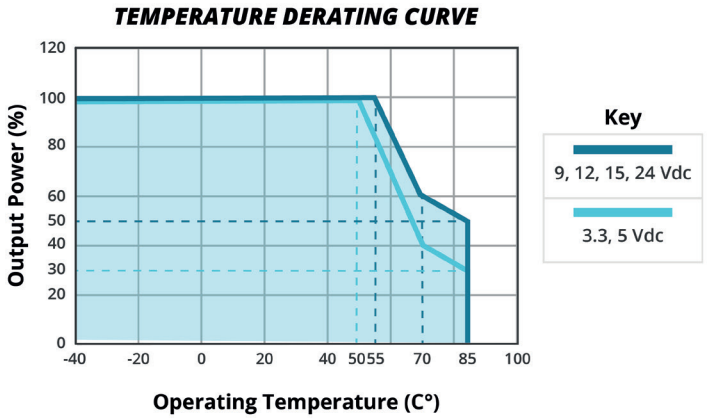

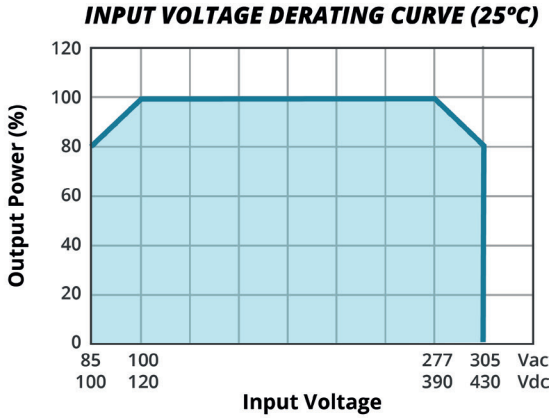

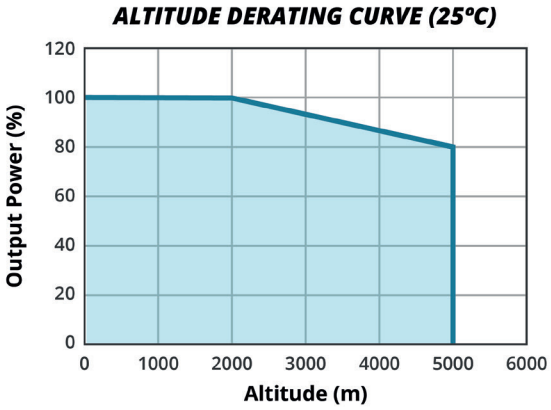

Note: 1. With an AC input between 85~100V/277~305Vac and a DC input between 100~120V/390~430Vdc, the output power must be derated as per temperature derating curves.
2. This product is suitable for applications using natural air cooling; for applications in closed environment please consult with CUI.

EFFICIENCY CURVES

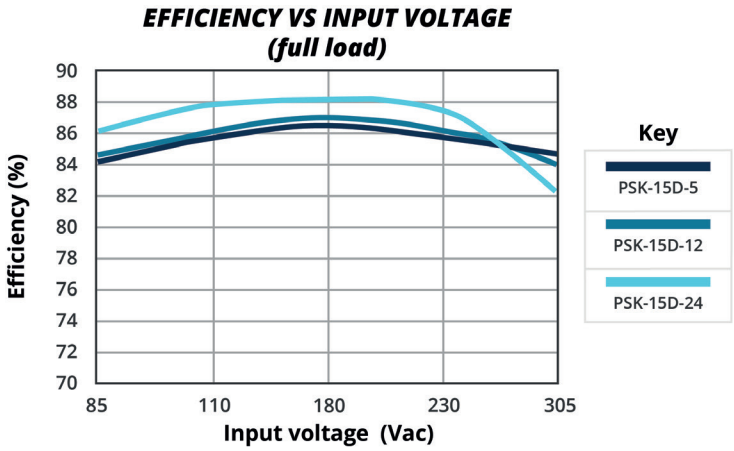

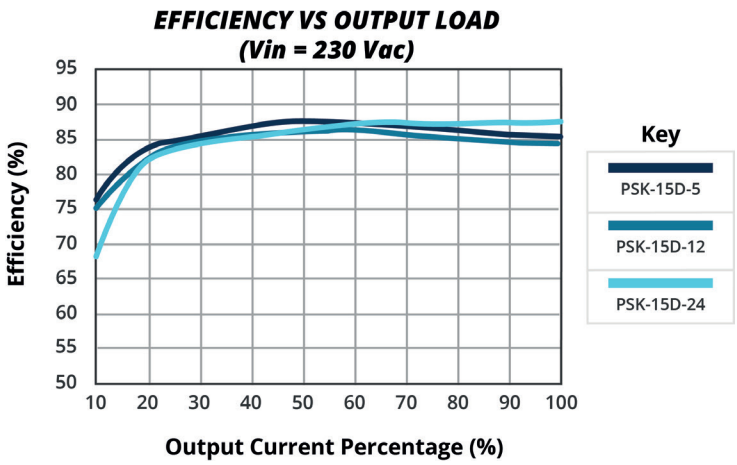

REVISION HISTORY

rev.	description	date
1.0	initial release	02/15/2021
1.01	over voltage category added to features	04/06/2021
1.02	per PCN-65631480R-01, the no-load power consumption of the 5 Vdc and 12 Vdc output variants was modified to 0.3 W (max) for all date codes 2148 (YYWW) or later	12/13/2021
1.03	derating and efficiency curves updated	01/25/2022
1.04	no load power consumption updated	05/03/2022
1.05	added UKCA	05/26/2022
1.06	medical icon added	05/04/2023
1.07	isolation voltage updated, EMC circuit for Class I added	01/10/2024
1.08	no load power consumption updated	03/05/2024

The revision history provided is for informational purposes only and is believed to be accurate.

CUI INC
a bel group

Headquarters
20050 SW 112th Ave.
Tualatin, OR 97062
800.275.4899

Fax 503.612.2383
cui.com
techsupport@cui.com

CUI offers a two (2) year limited warranty. Complete warranty information is listed on our website.

CUI reserves the right to make changes to the product at any time without notice. Information provided by CUI is believed to be accurate and reliable. However, no responsibility is assumed by CUI for its use, nor for any infringements of patents or other rights of third parties which may result from its use.

CUI products are not authorized or warranted for use as critical components in equipment that requires an extremely high level of reliability. A critical component is any component of a life support device or system whose failure to perform can be reasonably expected to cause the failure of the life support device or system, or to affect its safety or effectiveness.

Looking for pricing, stock, or lifecycle information?

Click below to explore more details on WIN SOURCE:

- View PSK-15D-12 on WIN SOURCE
- CUI Inc. Information

Optimize Your Supply Chain with WIN SOURCE Solutions

- Global Sourcing Solution
- Obsolete Management
- Cost Control Management
- Shortage Management
- Alternative Solution
- Excess Inventory Management