THE DATASHEET OF

LT1991IDD#TRPBF

www.win-source.net 0086-755-83957316

Precision, 100µA Gain Selectable Amplifier

FEATURES

- **Pin Configurable as a Difference Amplifier, Inverting and Noninverting Amplifier**
- **Difference Amplifier**
  - **Gain Range 1 to 13**
  - **CMRR >75dB**
- **Noninverting Amplifier**
  - **Gain Range 0.07 to 14**
- **Inverting Amplifier**
  - **Gain Range –0.08 to –13**
- **Gain Error <0.04%**
- Gain Drift < 3ppm/°C
- Wide Supply Range: Single 2.7V to Split ±18V
- Micropower: 100µA Supply Current
- Precision: 50µV Maximum Input Offset Voltage
- 560kHz Gain Bandwidth Product
- Rail-to-Rail Output
- Space Saving 10-Lead MSOP and DFN Packages

APPLICATIONS

- Handheld Instrumentation
- Medical Instrumentation
- Strain Gauge Amplifiers
- Differential to Single-Ended Conversion

DESCRIPTION

The LT®1991 combines a precision operational amplifier with eight precision resistors to form a one-chip solution for accurately amplifying voltages. Gains from –13 to 14 with a gain accuracy of 0.04% can be achieved using no external components. The device is particularly well suited for use as a difference amplifier, where the excellent resistor matching results in a common mode rejection ratio of greater than 75dB.

The amplifier features a 50µV maximum input offset voltage and a gain bandwidth product of 560kHz. The device operates from any supply voltage from 2.7V to 36V and draws only 100µA supply current on a 5V supply. The output swings to within 40mV of either supply rail.

The resistors have excellent matching, 0.04% over temperature for the 450k resistors. The matching temperature coefficient is guaranteed less than 3ppm/°C. The resistors are extremely linear with voltage, resulting in a gain nonlinearity of less than 10ppm.

The LT1991 is fully specified at 5V and ±15V supplies and from –40°C to 125°C. The device is available in space saving 10-lead MSOP and low profile (0.8mm) 3mm × 3mm DFN packages.

LT, LTC and LTM are registered trademarks of Linear Technology Corporation.
All other trademarks are the property of their respective owners.

TYPICAL APPLICATION

Rail-to-Rail Gain = 1 Difference Amplifier

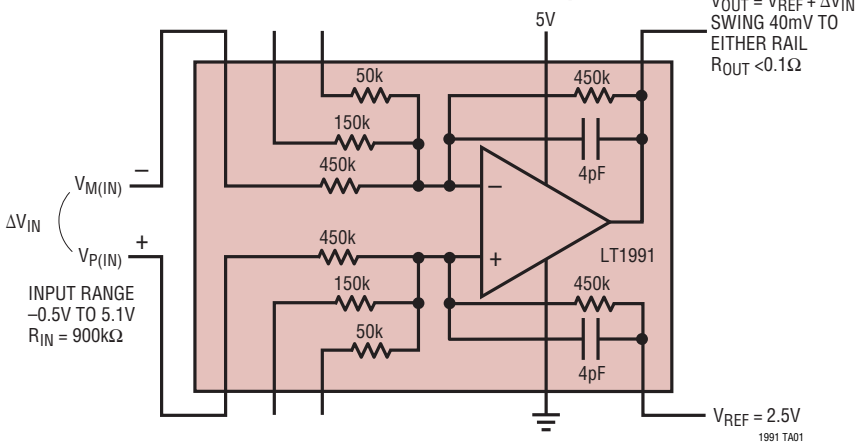

Distribution of Resistor Matching

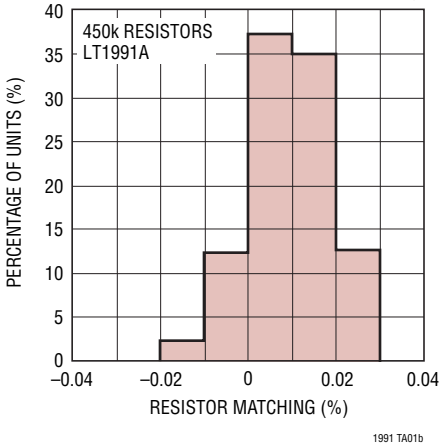

ABSOLUTE MAXIMUM RATINGS

(Note 1)

Total Supply Voltage (V^+ to V^-) 40V
Input Voltage (Pins P1/M1, Note 2) .....±60V
Input Voltage
(Other Inputs Note 2) .....V^+ + 0.2V to V^- – 0.2V
Output Short-Circuit Duration (Note 3) ..... Indefinite
Operating Temperature Range (Note 4)
LT1991C.....–40°C to 85°C
LT1991I.....–40°C to 85°C
LT1991H.....–40°C to 125°C
Specified Temperature Range (Note 5)
LT1991C.....–40°C to 85°C
LT1991I.....–40°C to 85°C
LT1991H.....–40°C to 125°C
Maximum Junction Temperature
DD Package ..... 125°C
MS Package ..... 150°C
Storage Temperature Range
DD Package .....–65°C to 125°C
MS Package.....–65°C to 150°C
Lead Temperature (Soldering, 10 sec) .....300°C

PIN CONFIGURATION

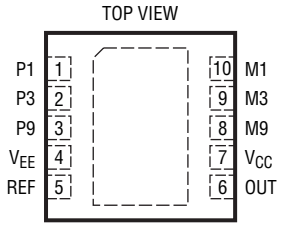

DD PACKAGE
10-LEAD (3mm × 3mm) PLASTIC DFN
EXPOSED PAD CONNECTED TO V_{EE} PCB
CONNECTION OPTIONAL

T_{JMAX} = 125°C, θ_{JA} = 43°C/W

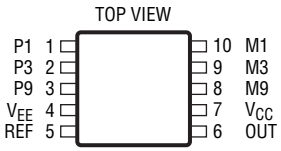

MS PACKAGE
10-LEAD PLASTIC MSOP

T_{JMAX} = 150°C, θ_{JA} = 230°C/W

ORDER INFORMATION

LEAD FREE FINISH	TAPE AND REEL	PART MARKING*	PACKAGE DESCRIPTION	SPECIFIED TEMPERATURE RANGE
LT1991CDD#PBF	LTCT1991CDD#TRPBF	LBMM	10-Lead (3mm × 3mm) Plastic DFN	0°C to 70°C
LT1991ACDD#PBF	LT1991ACDD#TRPBF	LBMM	10-Lead (3mm × 3mm) Plastic DFN	0°C to 70°C
LT1991IDD#PBF	LT1991IDD#TRPBF	LBMM	10-Lead (3mm × 3mm) Plastic DFN	–40°C to 85°C
LT1991AIDD#PBF	LT1991AIDD#TRPBF	LBMM	10-Lead (3mm × 3mm) Plastic DFN	–40°C to 85°C
LT1991HDD#PBF	LT1991HDD#TRPBF	LBMM	10-Lead (3mm × 3mm) Plastic DFN	–40°C to 125°C
LT1991CMS#PBF	LT1991CMS#TRPBF	LTQD	10-Lead Plastic MSOP	0°C to 70°C
LT1991ACMS#PBF	LT1991ACMS#TRPBF	LTQD	10-Lead Plastic MSOP	0°C to 70°C
LT1991IMS#PBF	LT1991IMS#TRPBF	LTQD	10-Lead Plastic MSOP	–40°C to 85°C
LT1991AIMS#PBF	LT1991AIMS#TRPBF	LTQD	10-Lead Plastic MSOP	–40°C to 85°C
LT1991HMS#PBF	LT1991HMS#TRPBF	LTQD	10-Lead Plastic MSOP	–40°C to 125°C

Consult LTC Marketing for parts specified with wider operating temperature ranges. *Temperature grades are identified by a label on the shipping container.
Consult LTC Marketing for information on non-standard lead based finish parts.

For more information on lead free part marking, go to: http://www.linear.com/leadfree/
For more information on tape and reel specifications, go to: http://www.linear.com/tapeandreel/

ELECTRICAL CHARACTERISTICS

The ● denotes the specifications which apply over the operating temperature range of 0°C to 70°C for C-grade parts and –40°C to 85°C for I-grade parts, otherwise specifications are at T_A = 25°C. Difference amplifier configuration, V_S = 5V, 0V or ±15V; V_{CM} = V_{REF} = half supply, unless otherwise noted.

SYMBOL	PARAMETER	CONDITIONS		MIN	TYP	MAX	UNITS
ΔG	Gain Error	V_S = ±15V, V_{OUT} = ±10V; R_L = 10k					
		G = 1; LT1991A	●			±0.04	%
		G = 1; LT1991	●			±0.08	%
		G = 3 or 9; LT1991A	●			±0.06	%
		G = 3 or 9; LT1991	●			±0.12	%
GNL	Gain Nonlinearity	V_S = ±15V; V_{OUT} = ±10V; R_L = 10k	●		1	10	ppm
ΔG/ΔT	Gain Drift vs Temperature (Note 6)	V_S = ±15V; V_{OUT} = ±10V; R_L = 10k	●		0.3	3	ppm/°C
CMRR	Common Mode Rejection Ratio, Referred to Inputs (RTI)	V_S = ±15V; V_{CM} = ±15.2V					
		G = 9; LT1991A	●	80	100		dB
		G = 3; LT1991A	●	75	93		dB
		G = 1; LT1991A	●	75	90		dB
		Any Gain; LT1991	●	60	70		dB
V_{CM}	Input Voltage Range (Note 7)	P1/M1 Inputs					
		V_S = ±15V; V_{REF} = 0V	●	–28		27.6	V
		V_S = 5V, 0V; V_{REF} = 2.5V	●	–0.5		5.1	V
		V_S = 3V, 0V; V_{REF} = 1.25V	●	0.75		2.35	V
		P1/M1 Inputs, P9/M9 Connected to REF					
		V_S = ±15V; V_{REF} = 0V	●	–60		60	V
		V_S = 5V, 0V; V_{REF} = 2.5V	●	–14		16.8	V
		V_S = 3V, 0V; V_{REF} = 1.25V	●	–1.5		7.3	V
		P3/M3 Inputs					
		V_S = ±15V; V_{REF} = 0V	●	–15.2		15.2	V
		V_S = 5V, 0V; V_{REF} = 2.5V	●	0.5		4.2	V
		V_S = 3V, 0V; V_{REF} = 1.25V	●	0.95		1.95	V
		P9/M9 Inputs					
		V_S = ±15V; V_{REF} = 0V	●	–15.2		15.2	V
		V_S = 5V, 0V; V_{REF} = 2.5V	●	0.85		3.9	V
		V_S = 3V, 0V; V_{REF} = 1.25V	●	1.0		1.9	V
V_{OS}	Op Amp Offset Voltage (Note 8)	LT1991AMS, V_S = 5V, 0V			15	50	μV
			●			135	μV
		LT1991AMS, V_S = ±15V			15	80	μV
			●			160	μV
		LT1991MS			25	100	μV
			●			200	μV
		LT1991DD			25	150	μV
			●			250	μV
$\Delta V_{OS}/\Delta T$	Op Amp Offset Voltage Drift (Note 6)		●		0.3	1	μV/°C
IB	Op Amp Input Bias Current (Note 11)				2.5	5	nA
			●			7.5	nA
I_{OS}	Op Amp Input Offset Current (Note 11)	LT1991A			50	500	pA
			●			750	pA
		LT1991			50	1000	pA
			●			1500	pA
	Op Amp Input Noise Voltage	0.01Hz to 1Hz			0.35		μV_{P-P}
		0.01Hz to 1Hz			0.07		μV_{RMS}
		0.1Hz to 10Hz			0.25		μV_{P-P}
		0.1Hz to 10Hz			0.05		μV_{RMS}
e_n	Input Noise Voltage Density	G = 1; f = 1kHz			180		$nV/\sqrt{Hz}$
		G = 9; f = 1kHz			46		$nV/\sqrt{Hz}$

ELECTRICAL CHARACTERISTICS

The ● denotes the specifications which apply over the operating temperature range of 0°C to 70°C for C-grade parts and –40°C to 85°C for I-grade parts, otherwise specifications are at T_A = 25°C. Difference amplifier configuration, V_S = 5V, 0V or ±15V; V_{CM} = V_{REF} = half supply, unless otherwise noted.

SYMBOL	PARAMETER	CONDITIONS		MIN	TYP	MAX	UNITS
R_{IN}	Input Impedance (Note 10)	P1 (M1 = Ground) P3 (M3 = Ground) P9 (M9 = Ground)	● ● ●	630 420 350	900 600 500	1170 780 650	kΩ kΩ kΩ
		M1 (P1 = Ground) M3 (P3 = Ground) M9 (P9 = Ground)	● ● ●	315 105 35	450 150 50	585 195 65	kΩ kΩ kΩ
ΔR	Resistor Matching (Note 9)	450k Resistors, LT1991A Other Resistors, LT1991A 450k Resistors, LT1991 Other Resistors, LT1991	● ● ● ●		0.01 0.02 0.02 0.04	0.04 0.06 0.08 0.12	% % % %
ΔR/ΔT	Resistor Temperature Coefficient (Note 6)	Resistor Matching Absolute Value	● ●		0.3 –30	3	ppm/°C ppm/°C
PSRR	Power Supply Rejection Ratio	V_S = ±1.35V to ±18V (Note 8)	●	105	135		dB
	Minimum Supply Voltage		●		2.4	2.7	V
V_{OUT}	Output Voltage Swing (to Either Rail)	No Load V_S = 5V, 0V V_S = 5V, 0V V_S = ±15V	 ● ●		 40	 55 65 110	 mV mV mV
		1mA Load V_S = 5V, 0V V_S = 5V, 0V V_S = ±15V	 ● ●		 150	 225 275 300	 mV mV mV
I_{SC}	Output Short-Circuit Current (Sourcing)	Drive Output Positive; Short Output to Ground	 ●	8 4	12		mA mA
	Output Short-Circuit Current (Sinking)	Drive Output Negative; Short Output to V_S or Midsupply	 ●	8 4	21		mA mA
BW	–3dB Bandwidth	G = 1 G = 3 G = 9			110 78 40		kHz kHz kHz
GBWP	Op Amp Gain Bandwidth Product	f = 10kHz			560		kHz
t_r, t_f	Rise Time, Fall Time	G = 1; 0.1V Step; 10% to 90% G = 9; 0.1V Step; 10% to 90%			3 8		µs µs
t_s	Settling Time to 0.01%	G = 1; V_S = 5V, 0V; 2V Step G = 1; V_S = 5V, 0V; –2V Step G = 1; V_S = ±15V, 10V Step G = 1; V_S = ±15V, –10V Step			42 48 114 74		µs µs µs µs
SR	Slew Rate	V_S = 5V, 0V; V_{OUT} = 1V to 4V V_S = ±15V; V_{OUT} = ±10V; V_{MEAS} = ±5V	● ●	0.06 0.08	0.12 0.12		V/µs V/µs
I_s	Supply Current	V_S = 5V, 0V	 ●		100	110 150	µA µA
		V_S = ±15V	 ●		130	160 210	µA µA

ELECTRICAL CHARACTERISTICS

The ● denotes the specifications which apply over the operating temperature range of –40°C to 125°C for H-grade parts, otherwise specifications are at T_A = 25°C. Difference amplifier configuration, V_S = 5V, 0V or ±15V; V_{CM} = V_{REF} = half supply, unless otherwise noted.

SYMBOL	PARAMETER	CONDITIONS		MIN	TYP	MAX	UNITS
ΔG	Gain Error	V_S = ±15V, V_{OUT} = ±10V; R_L = 10k					
		G = 1	●			±0.08	%
		G = 3 or 9	●			±0.12	%
GNL	Gain Nonlinearity	V_S = ±15V; V_{OUT} = ±10V; R_L = 10k	●		1	10	ppm
ΔG/ΔT	Gain Drift vs Temperature (Note 6)	V_S = ±15V; V_{OUT} = ±10V; R_L = 10k	●		0.3	3	ppm/°C
CMRR	Common Mode Rejection Ratio, Referred to Inputs (RTI)	V_S = ±15V; V_{CM} = ±15.2V					
		G = 9	●	77	100		dB
		G = 3	●	70	93		dB
		G = 1	●	70	90		dB
V_{CM}	Input Voltage Range (Note 7)	P1/M1 Inputs					
		V_S = ±15V; V_{REF} = 0V	●	–28		27.6	V
		V_S = 5V, 0V; V_{REF} = 2.5V	●	–0.5		5.1	V
		V_S = 3V, 0V; V_{REF} = 1.25V	●	0.75		2.35	V
		P1/M1 Inputs, P9/M9 Connected to REF					
		V_S = ±15V; V_{REF} = 0V	●	–60		60	V
		V_S = 5V, 0V; V_{REF} = 2.5V	●	–14		16.8	V
		V_S = 3V, 0V; V_{REF} = 1.25V	●	–1.5		7.3	V
		P3/M3 Inputs					
		V_S = ±15V; V_{REF} = 0V	●	–15.2		15.2	V
		V_S = 5V, 0V; V_{REF} = 2.5V	●	0.5		4.2	V
		V_S = 3V, 0V; V_{REF} = 1.25V	●	0.95		1.95	V
		P9/M9 Inputs					
		V_S = ±15V; V_{REF} = 0V	●	–15.2		15.2	V
		V_S = 5V, 0V; V_{REF} = 2.5V	●	0.85		3.9	V
		V_S = 3V, 0V; V_{REF} = 1.25V	●	1.0		1.9	V
V_{OS}	Op Amp Offset Voltage (Note 8)	LT1991MS			25	100	μV
			●			285	μV
		LT1991DD			25	150	μV
			●			295	μV
$\Delta V_{OS}/\Delta T$	Op Amp Offset Voltage Drift (Note 6)		●		0.3	1	μV/°C
IB	Op Amp Input Bias Current (Note 11)				2.5	5	nA
			●			25	nA
I_{OS}	Op Amp Input Offset Current (Note 11)				50	1000	pA
			●			4500	pA
	Op Amp Input Noise Voltage	0.01Hz to 1Hz			0.35		μV_{P-P}
		0.01Hz to 1Hz			0.07		μV_{RMS}
		0.1Hz to 10Hz			0.25		μV_{P-P}
		0.1Hz to 10Hz			0.05		μV_{RMS}
e_n	Input Noise Voltage Density	G = 1; f = 1kHz			180		$nV/\sqrt{Hz}$
		G = 9; f = 1kHz			46		$nV/\sqrt{Hz}$
R_{IN}	Input Impedance (Note 10)	P1 (M1 = Ground)	●	630	900	1170	kΩ
		P3 (M3 = Ground)	●	420	600	780	kΩ
		P9 (M9 = Ground)	●	350	500	650	kΩ
		M1 (P1 = Ground)	●	315	450	585	kΩ
		M3 (P3 = Ground)	●	105	150	195	kΩ
		M9 (P9 = Ground)	●	35	50	65	kΩ
ΔR	Resistor Matching (Note 9)	450k Resistors	●		0.02	0.08	%
		Other Resistors	●		0.04	0.12	%
ΔR/ΔT	Resistor Temperature Coefficient (Note 6)	Resistor Matching	●		0.3	3	ppm/°C
		Absolute Value	●		–30		ppm/°C

ELECTRICAL CHARACTERISTICS

The ● denotes the specifications which apply over the operating temperature range of –40°C to 125°C for H-grade parts, otherwise specifications are at T_A = 25°C. Difference amplifier configuration, V_S = 5V, 0V or ±15V; V_{CM} = V_{REF} = half supply, unless otherwise noted.

SYMBOL	PARAMETER	CONDITIONS		MIN	TYP	MAX	UNITS
PSRR	Power Supply Rejection Ratio	V_S = ±1.35V to ±18V (Note 8)	●	105	135		dB
	Minimum Supply Voltage		●		2.4	2.7	V
V_{OUT}	Output Voltage Swing (to Either Rail)	No Load V_S = 5V, 0V V_S = 5V, 0V V_S = ±15V	 ● ●		 40	 55 75 120	 mV mV mV
		1mA Load V_S = 5V, 0V V_S = 5V, 0V V_S = ±15V	 ● ●		 150	 225 300 340	 mV mV mV
I_{SC}	Output Short-Circuit Current (Sourcing)	Drive Output Positive; Short Output to Ground	 ●	8 4	12		mA mA
	Output Short-Circuit Current (Sinking)	Drive Output Negative; Short Output to V_S or Midsupply	 ●	8 4	21		mA mA
BW	–3dB Bandwidth	G = 1 G = 3 G = 9			110 78 40		kHz kHz kHz
GBWP	Op Amp Gain Bandwidth Product	f = 10kHz			560		kHz
t_r, t_f	Rise Time, Fall Time	G = 1; 0.1V Step; 10% to 90% G = 9; 0.1V Step; 10% to 90%			3 8		µs µs
t_s	Settling Time to 0.01%	G = 1; V_S = 5V, 0V; 2V Step G = 1; V_S = 5V, 0V; –2V Step G = 1; V_S = ±15V, 10V Step G = 1; V_S = ±15V, –10V Step			42 48 114 74		µs µs µs µs
SR	Slew Rate	V_S = 5V, 0V; V_{OUT} = 1V to 4V V_S = ±15V; V_{OUT} = ±10V; V_{MEAS} = ±5V	● ●	0.06 0.08	0.12 0.12		V/µs V/µs
I_s	Supply Current	V_S = 5V, 0V	 ●		100	110 180	µA µA
		V_S = ±15V	 ●		130	160 250	µA µA

Note 1: Stresses beyond those listed under Absolute Maximum Ratings may cause permanent damage to the device. Exposure to any Absolute Maximum Rating condition for extended periods may affect device reliability and lifetime.

Note 2: The P3/M3 and P9/M9 inputs should not be taken more than 0.2V beyond the supply rails. The P1/M1 inputs can withstand ±60V if P9/M9 are grounded and V_S = ±15V (see Applications Information section about "High Voltage CM Difference Amplifiers").

Note 3: A heat sink may be required to keep the junction temperature below absolute maximum ratings.

Note 4: Both the LT1991C and LT1991I are guaranteed functional over the –40°C to 85°C temperature range. The LTC1991H is guaranteed functional over the –40°C to 125°C temperature range.

Note 5: The LT1991C is guaranteed to meet the specified performance from 0°C to 70°C and is designed, characterized and expected to meet specified performance from –40°C to 85°C but is not tested or QA sampled at these temperatures. The LT1991I is guaranteed to meet specified performance from –40°C to 85°C. The LT1991H is guaranteed to meet specified performance from –40°C to 125°C.

Note 6: This parameter is not 100% tested.

Note 7: Input voltage range is guaranteed by the CMRR test at V_S = ±15V. For the other voltages, this parameter is guaranteed by design and through correlation with the ±15V test. See the Applications Information section to determine the valid input voltage range under various operating conditions.

Note 8: Offset voltage, offset voltage drift and PSRR are defined as referred to the internal op amp. You can calculate output offset as follows. In the case of balanced source resistance, $V_{OS,OUT} = V_{OS}$ • NOISEGAIN + I_{OS} • 450k + I_B • 450k • (1– R_P/R_N) where R_P and R_N are the total resistance at the op amp positive and negative terminal respectively.

Note 9: Applies to resistors that are connected to the inverting inputs. Resistor matching is not tested directly, but is guaranteed by the gain error test.

Note 10: Input impedance is tested by a combination of direct measurements and correlation to the CMRR and gain error tests.

Note 11: I_B and I_{OS} are tested at V_S = 5V, 0V only.

TYPICAL PERFORMANCE CHARACTERISTICS (Difference Amplifier Configuration)

Supply Current vs Supply Voltage

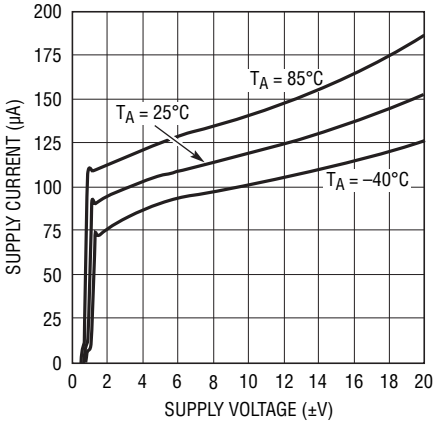

Output Voltage Swing vs Temperature

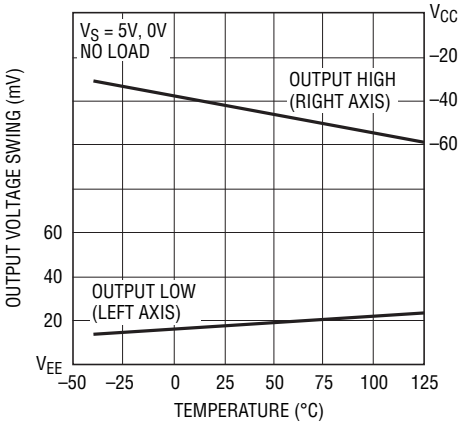

Output Voltage Swing vs Load Current (Output Low)

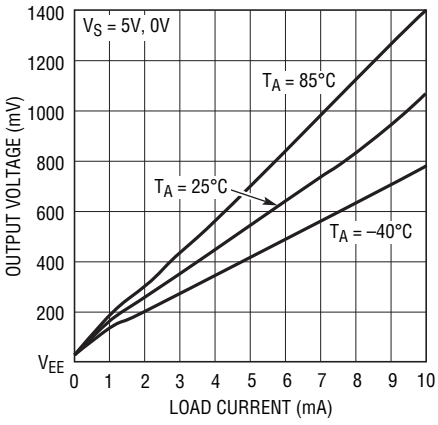

Output Voltage Swing vs Load Current (Output High)

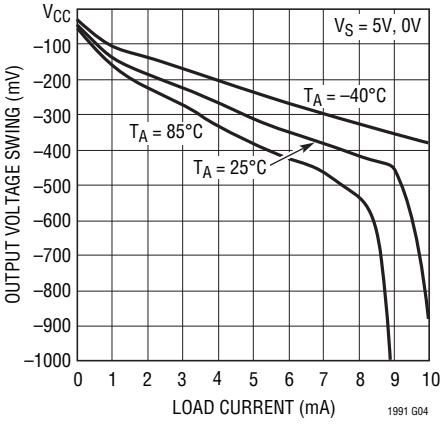

Output Short-Circuit Current vs Temperature

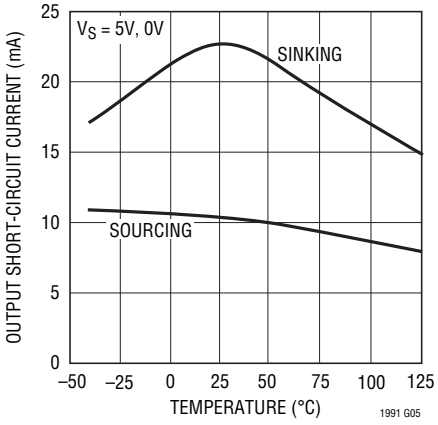

Input Offset Voltage vs Difference Gain

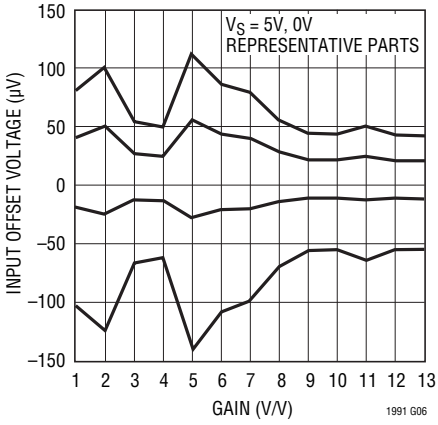

Output Offset Voltage vs Difference Gain

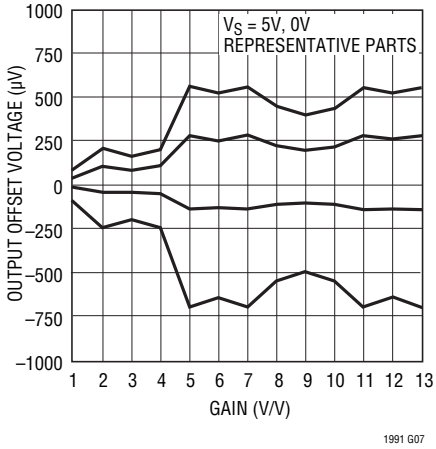

Gain Error vs Load Current

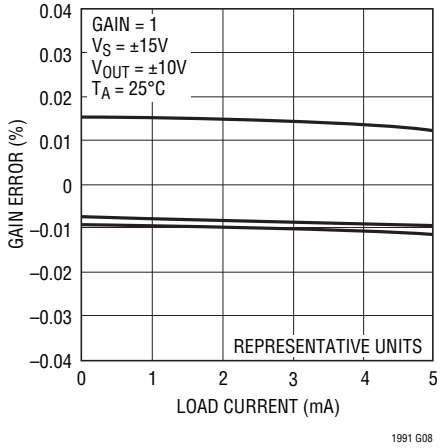

Slew Rate vs Temperature

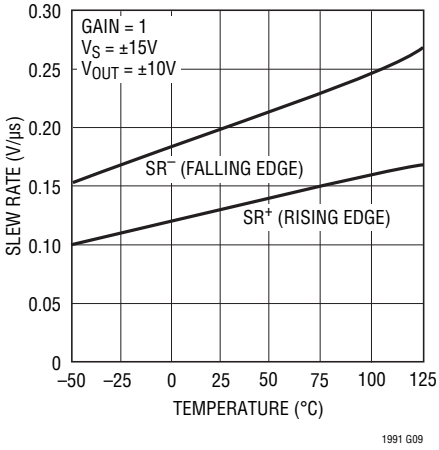

TYPICAL PERFORMANCE CHARACTERISTICS (Difference Amplifier Configuration)

Bandwidth vs Gain

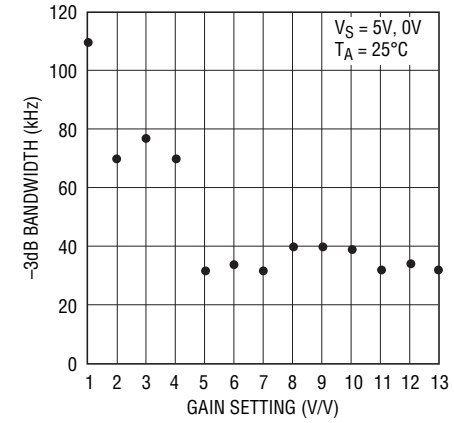

CMRR vs Frequency

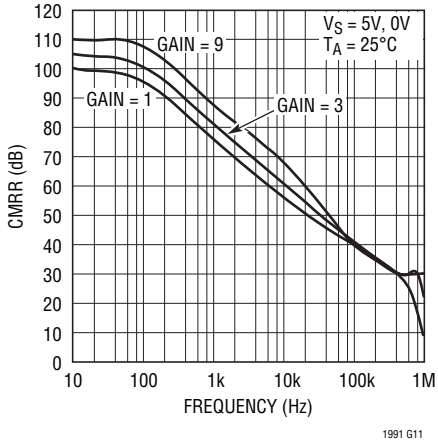

PSRR vs Frequency

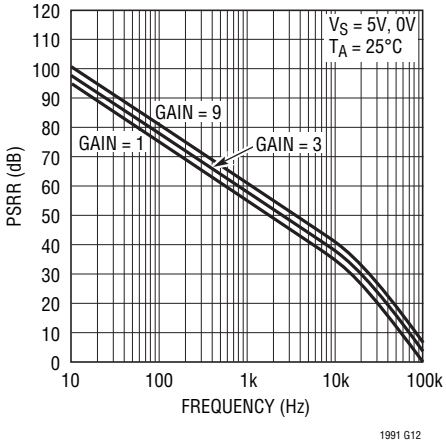

Output Impedance vs Frequency

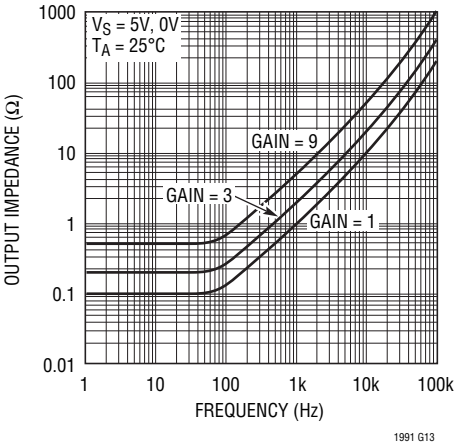

CMRR vs Temperature

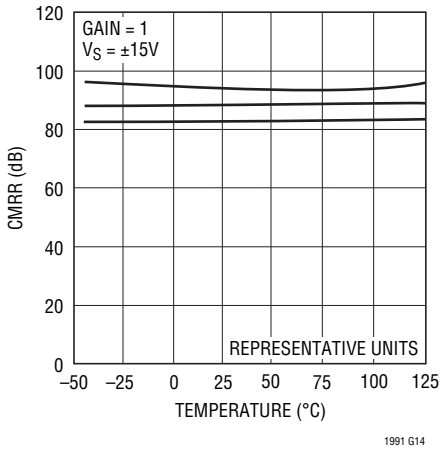

Gain Error vs Temperature

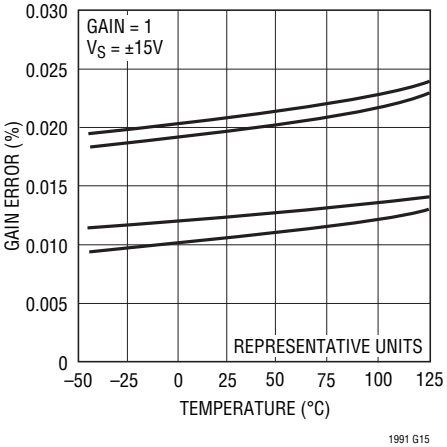

Gain vs Frequency

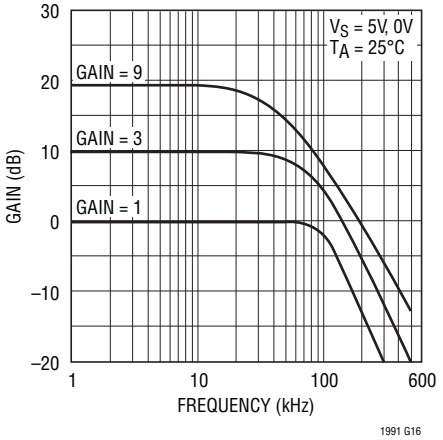

Gain and Phase vs Frequency

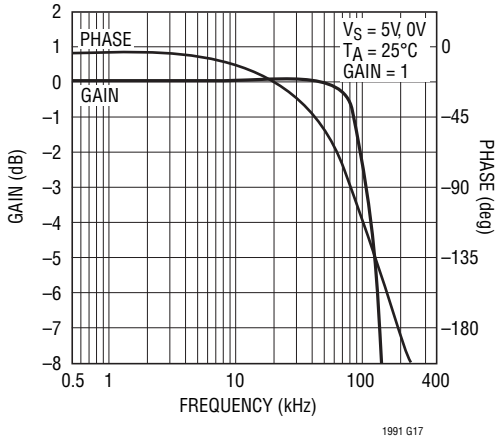

0.01Hz to 1Hz Voltage Noise

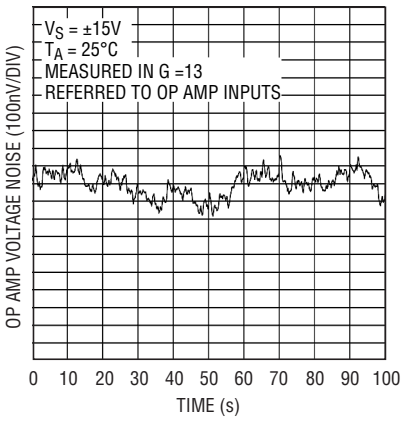

TYPICAL PERFORMANCE CHARACTERISTICS

Small Signal Transient Response

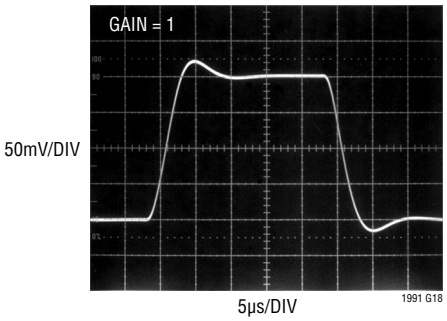

Small Signal Transient Response

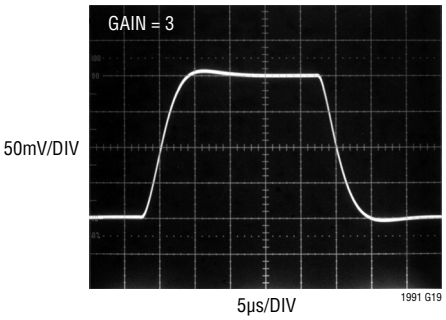

Small Signal Transient Response

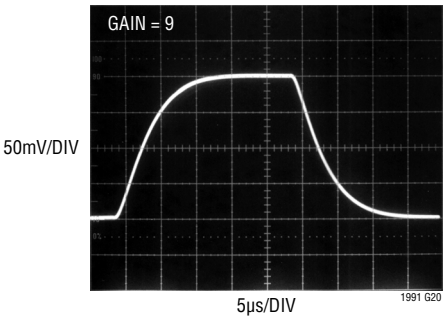

PIN FUNCTIONS (Difference Amplifier Configuration)

P1 (Pin 1): Noninverting Gain-of-1 input. Connects a 450k internal resistor to the op amp's noninverting input.

P3 (Pin 2): Noninverting Gain-of-3 input. Connects a 150k internal resistor to the op amp's noninverting input.

P9 (Pin 3): Noninverting Gain-of-9 input. Connects a 50k internal resistor to the op amp's noninverting input.

V_{EE} (Pin 4): Negative Power Supply. Can be either ground (in single supply applications), or a negative voltage (in split supply applications).

REF (Pin 5): Reference Input. Sets the output level when difference between inputs is zero. Connects a 450k internal resistor to the op amp's noninverting input.

OUT (Pin 6): Output. $V_{OUT} = V_{REF} + 1 \bullet (V_{P1} - V_{M1}) + 3 \bullet (V_{P3} - V_{M3}) + 9 \bullet (V_{P9} - V_{M9})$.

V_{CC} (Pin 7): Positive Power Supply. Can be anything from 2.7V to 36V above the V_{EE} voltage.

M9 (Pin 8): Inverting Gain-of-9 input. Connects a 50k internal resistor to the op amp's inverting input.

M3 (Pin 9): Inverting Gain-of-3 input. Connects a 150k internal resistor to the op amp's inverting input.

M1 (Pin 10): Inverting Gain-of-1 input. Connects a 450k internal resistor to the op amp's inverting input.

Exposed Pad: Must be soldered to PCB.

BLOCK DIAGRAM

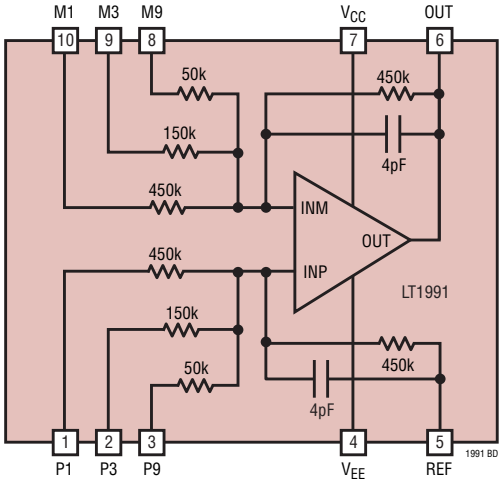

APPLICATIONS INFORMATION

Introduction

The LT1991 may be the last op amp you ever have to stock. Because it provides you with several precision matched resistors, you can easily configure it into several different classical gain circuits without adding external components. The several pages of simple circuits in this data sheet demonstrate just how easy the LT1991 is to use. It can be configured into difference amplifiers, as well as into inverting and noninverting single ended amplifiers. The fact that the resistors and op amp are provided together in such a small package will often save you board space and reduce complexity for easy probing.

The Op Amp

The op amp internal to the LT1991 is a precision device with 15µV typical offset voltage and 3nA input bias current. The input offset current is extremely low, so matching the source resistance seen by the op amp inputs will provide for the best output accuracy. The op amp inputs are not rail-to-rail, but extend to within 1.2V of V_{CC} and 1V of V_{EE}. For many configurations though, the chip inputs will function rail-to-rail because of effective attenuation to the +input. The output is truly rail-to-rail, getting to within 40mV of the supply rails. The gain bandwidth product of the op amp is about 560kHz. In noise gains of 2 or more, it is stable into capacitive loads up to 500pF. In noise gains below 2, it is stable into capacitive loads up to 100pF.

The Resistors

The resistors internal to the LT1991 are very well matched SiChrome based elements protected with barrier metal. Although their absolute tolerance is fairly poor (±30%), their matching is to within 0.04%. This allows the chip to achieve a CMRR of 75dB, and gain errors within 0.04%. The resistor values are 50k, 150k, and 2 of 450k, connected to each of the inputs. The resistors have power limitations of 1watt for the 450k resistors, 0.3watt for the 150k resistors and 0.5watt for the 50k resistors; however, in practice, power dissipation will be limited well below these values by the maximum voltage allowed on the input and REF pins. The 450k resistors connected to the M1 and P1 inputs are isolated from the substrate, and can therefore be taken beyond the supply voltages. The naming of the pins “P1,” “P3,” “P9,” etc., is based on their relative admittances. Because it has 9 times the admittance, the voltage applied to the P9 input has 9 times the effect of the voltage applied to the P1 input.

Bandwidth

The bandwidth of the LT1991 will depend on the gain you select (or more accurately the noise gain resulting from the gain you select). In the lowest configurable gain of 1, the –3dB bandwidth is limited to 450kHz, with peaking of about 2dB at 280kHz. In the highest configurable gains, bandwidth is limited to 32kHz.

Input Noise

The LT1991 input noise is dominated by the Johnson noise of the internal resistors ($\sqrt{4kTR}$). Paralleling all four resistors to the +input gives a 32.1kΩ resistance, for $23nV/\sqrt{Hz}$ of voltage noise. The equivalent network on the –input gives another $23nV/\sqrt{Hz}$, and taking their RMS sum gives a total $33nV/\sqrt{Hz}$ input referred noise floor. Output noise depends on configuration and noise gain.

Input Resistance

The LT1991 input resistances vary with configuration, but once configured are apparent on inspection. Note that resistors connected to the op amp’s –input are looking into a virtual ground, so they simply parallel. Any feedback resistance around the op amp does not contribute to input resistance. Resistors connected to the op amp’s +input are looking into a high impedance, so they add as parallel or series depending on how they are connected, and whether or not some of them are grounded. The op amp +input itself presents a very high GΩ impedance. In the classical noninverting op amp configuration, the LT1991 presents the high input impedance of the op amp, as is usual for the noninverting case.

Common Mode Input Voltage Range

The LT1991 valid common mode input range is limited by three factors:

1. Maximum allowed voltage on the pins
2. The input voltage range of the internal op amp
3. Valid output voltage

APPLICATIONS INFORMATION

The maximum voltage allowed on the P3, M3, P9, and M9 inputs includes the positive and negative supply plus a diode drop. These pins should not be driven more than 0.2V outside of the supply rails. This is because they are connected through diodes to internal manufacturing post-package trim circuitry, and through a substrate diode to V_{EE}. If more than 10mA is allowed to flow through these pins, there is a risk that the LT1991 will be detrimmed or damaged. The P1 and M1 inputs do not have clamp diodes or substrate diodes or trim circuitry and can be taken well outside the supply rails. The maximum allowed voltage on the P1 and M1 pins is ±60V.

The input voltage range of the internal op amp extends to within 1.2V of V_{CC} and 1V of V_{EE}. The voltage at which the op amp inputs common mode is determined by the voltage at the op amp's +input, and this is determined by the voltages on pins P1, P3, P9 and REF (see "Calculating Input Voltage Range" section). This is true provided that the op amp is functioning and feedback is maintaining the inputs at the same voltage, which brings us to the third requirement.

For valid circuit function, the op amp output must not be clipped. The output will clip if the input signals are attempting to force it to within 40mV of its supply voltages. This usually happens due to too large a signal level, but it can also occur with zero input differential and must therefore be included as an example of a common mode problem. Consider Figure 1. This shows the LT1991 configured as a gain of 13 difference amplifier on a single supply with the output REF connected to ground. This is a great circuit, but it does not support V_{DM} = 0V at any common mode because the output clips into ground while trying to produce $0V_{OUT}$. It can be fixed simply by declaring the valid input differential range not to extend below +4mV, or by elevating the REF pin above 40mV, or by providing a negative supply.

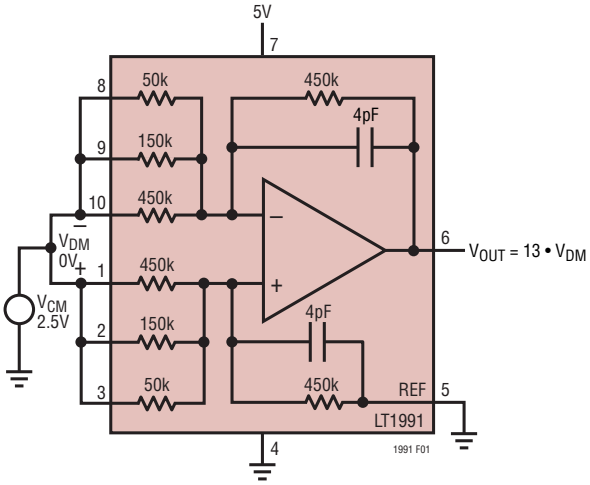

Figure 1. Difference Amplifier Cannot Produce 0V on a Single Supply. Provide a Negative Supply, or Raise Pin 5, or Provide 4mV of V_{DM}

Calculating Input Voltage Range

Figure 2 shows the LT1991 in the generalized case of a difference amplifier, with the inputs shorted for the common mode calculation. The values of R_F and R_G are dictated by how the P inputs and REF pin are connected. By superposition we can write:

$$V_{INT} = V_{EXT} \bullet (R_F/(R_F + R_G)) + V_{REF} \bullet (R_G/(R_F + R_G))$$

Or, solving for V_{EXT}:

$$V_{EXT} = V_{INT} \bullet (1 + R_G/R_F) - V_{REF} \bullet R_G/R_F$$

But valid V_{INT} voltages are limited to V_{CC} – 1.2V and V_{EE} + 1V, so:

$$\text{MAX } V_{EXT} = (V_{CC} - 1.2) \bullet (1 + R_G/R_F) - V_{REF} \bullet R_G/R_F$$

and:

$$\text{MIN } V_{EXT} = (V_{EE} + 1) \bullet (1 + R_G/R_F) - V_{REF} \bullet R_G/R_F$$

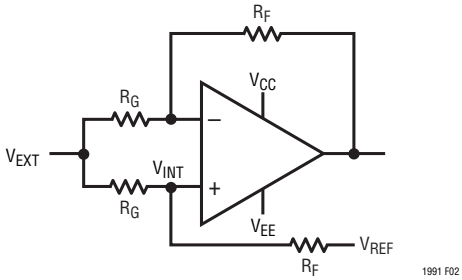

Figure 2. Calculating CM Input Voltage Range

These two voltages represent the high and low extremes of the common mode input range, if the other limits have not already been exceeded (1 and 3, above). In most cases, the inverting inputs M1 through M9 can be taken further than these two extremes because doing this does not move the op amp input common mode. To calculate the limit on this additional range, see Figure 3. Note that,

APPLICATIONS INFORMATION

with V_{MORE} = 0, the op amp output is at V_{REF}. From the max V_{EXT} (the high cm limit), as V_{MORE} goes positive, the op amp output will go more negative from V_{REF} by the amount $V_{MORE} \bullet R_F/R_G$, so:

$$V_{OUT} = V_{REF} - V_{MORE} \bullet R_F/R_G$$

Or:

$$V_{MORE} = (V_{REF} - V_{OUT}) \bullet R_G/R_F$$

The most negative that V_{OUT} can go is V_{EE} + 0.04V, so:

$$\text{Max } V_{MORE} = (V_{REF} - V_{EE} - 0.04V) \bullet R_G/R_F$$

(should be positive)

The situation where this function is negative, and therefore problematic, when V_{REF} = 0 and V_{EE} = 0, has already been dealt with in Figure 1. The strength of the equation is demonstrated in that it provides the three solutions suggested in Figure 1: raise V_{REF}, lower V_{EE}, or provide some negative V_{MORE}.

Likewise, from the lower common mode extreme, making the negative input more negative will raise the output voltage, limited by V_{CC} – 0.04V.

$$\text{MIN } V_{MORE} = (V_{REF} - V_{CC} + 0.04V) \bullet R_G/R_F$$

(should be negative)

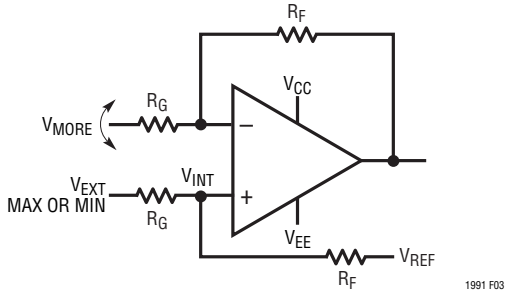

Figure 3. Calculating Additional Voltage Range of Inverting Inputs

Again, the additional input range calculated here is only available provided the other remaining constraint is not violated, the maximum voltage allowed on the pin.

The Classical Noninverting Amplifier: High Input Z

Perhaps the most common op amp configuration is the noninverting amplifier. Figure 4 shows the textbook representation of the circuit on the top. The LT1991 is shown on the bottom configured in a precision gain of 5.5. One of the benefits of the noninverting op amp configuration is that the input impedance is extremely high. The LT1991 maintains this benefit. Given the finite number of available feedback resistors in the LT1991, the number of gain configurations is also finite. The complete list of such Hi-Z input noninverting gain configurations is shown in Table 1. Many of these are also represented in Figure 5 in schematic form. Note that the P-side resistor inputs have been connected so as to match the source impedance seen by the internal op amp inputs. Note also that gain and noise gain are identical, for optimal precision.

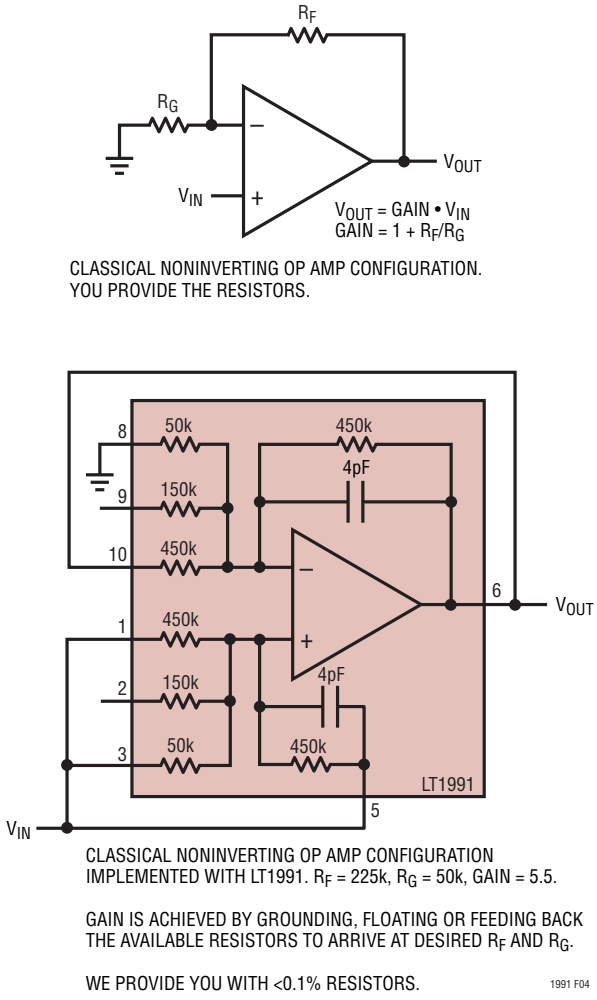

Figure 4. The LT1991 as a Classical Noninverting Op Amp

APPLICATIONS INFORMATION

Table 1. Configuring the M Pins for Simple Noninverting Gains. The P Inputs are driven as shown in the examples on the next page

	M9, M3, M1 Connection		
Gain	**M9**	**M3**	**M1**
1	Output	Output	Output
1.077	Output	Output	Ground
1.1	Output	Float	Ground
1.25	Float	Output	Ground
1.273	Output	Ground	Output
1.3	Output	Ground	Float
1.4	Output	Ground	Ground
2	Float	Float	Ground
2.5	Float	Ground	Output
2.8	Ground	Output	Output
3.25	Ground	Output	Float
3.5	Ground	Output	Ground
4	Float	Ground	Float
5	Float	Ground	Ground
5.5	Ground	Float	Output
7	Ground	Ground	Output
10	Ground	Float	Float
11	Ground	Float	Ground
13	Ground	Ground	Float
14	Ground	Ground	Ground

APPLICATIONS INFORMATION

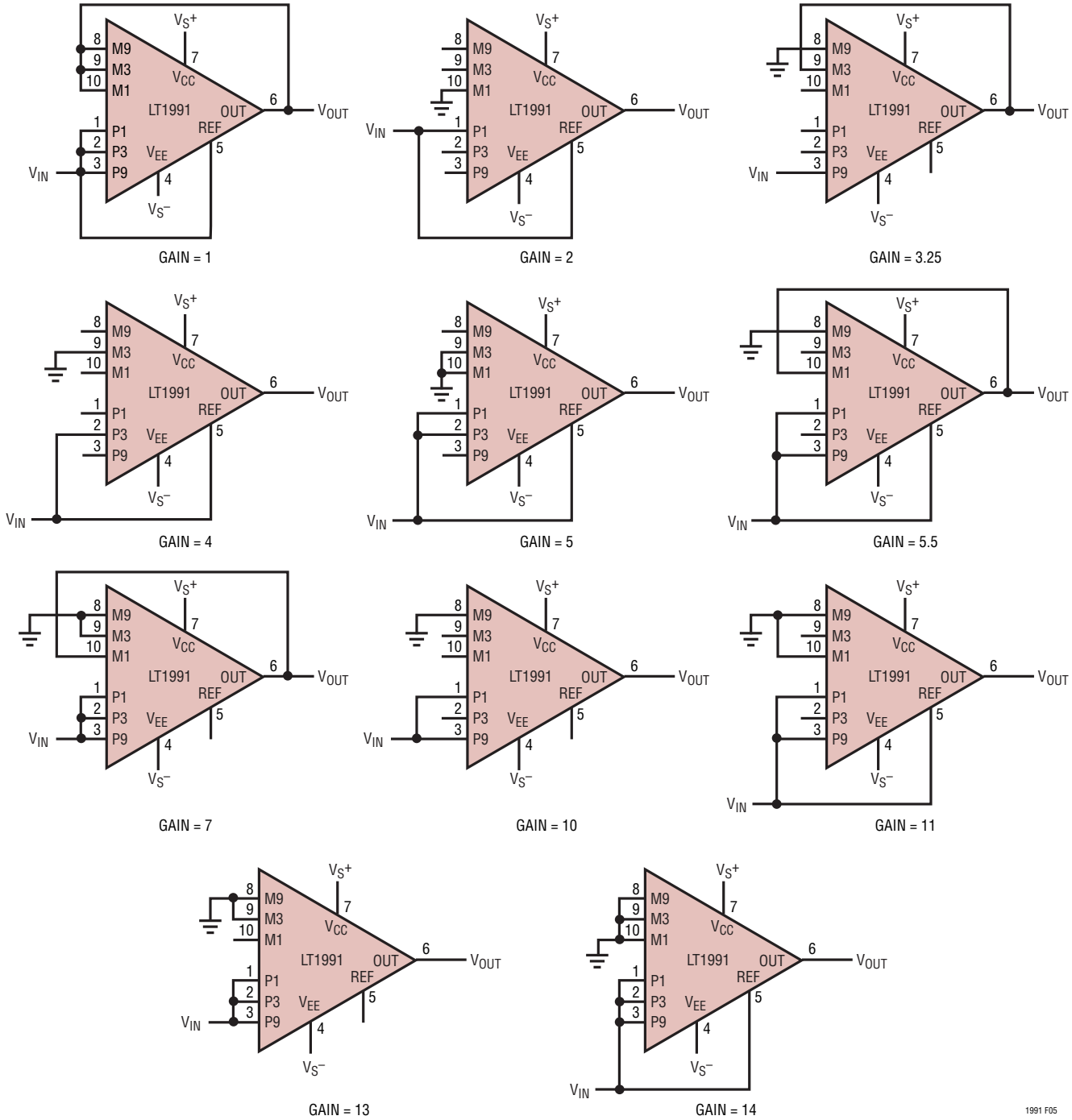

Figure 5. Some Implementations of Classical Noninverting Gains Using the LT1991. High Input Z Is Maintained

APPLICATIONS INFORMATION

Attenuation Using the P Input Resistors

Attenuation happens as a matter of fact in difference amplifier configurations, but it is also used for reducing peak signal level or improving input common mode range even in single ended systems. When signal conditioning indicates a need for attenuation, the LT1991 resistors are ready at hand. The four precision resistors can provide several attenuation levels, and these are tabulated in Table 2 as a design reference.

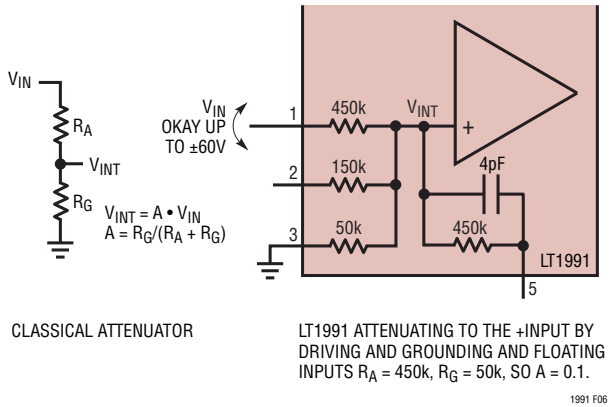

Figure 6. LT1991 Provides for Easy Attenuation to the Op Amp's +Input. The P1 Input Can Be Taken Well Outside of the Supplies

Because the attenuations and the noninverting gains are set independently, they can be combined. This provides high gain resolution, about 340 unique gains between 0.077 and 14, as plotted in Figure 7. This is too large a number to tabulate, but the designer can calculate achievable gain by taking the vector product of the gains and attenuations in Tables 1 and 2, and seeking the best match. Average gain resolution is 1.5%, with a worst-case of 7%.

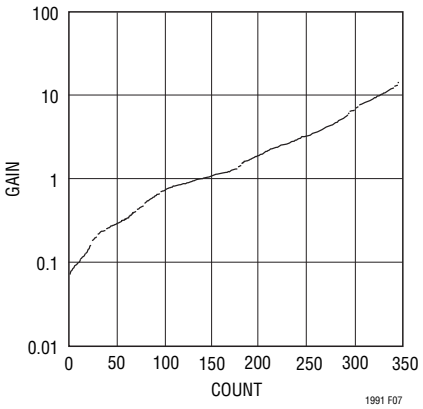

Figure 7. Over 346 Unique Gain Settings Achievable with the LT1991 by Combining Attenuation with Noninverting Gain

Table 2. Configuring the P Pins for Various Attenuations. Those Shown in Bold Are Functional Even When the Input Drive Exceeds the Supplies.

	P9, P3, P1, REF Connection			
A	**P9**	**P3**	**P1**	**REF**
0.0714	Ground	Ground	**Drive**	Ground
0.0769	Ground	Ground	**Drive**	Float
0.0909	Ground	Float	**Drive**	Ground
0.1	Ground	Float	**Drive**	Float
0.143	Ground	Ground	Drive	Drive
0.182	Ground	Float	Drive	Drive
0.2	Float	Ground	**Drive**	Ground
0.214	Ground	Drive	Ground	Ground
0.231	Ground	Drive	Float	Ground
0.25	Float	Ground	**Drive**	Float
0.286	Ground	Drive	Drive	Ground
0.308	Ground	Drive	Drive	Float
0.357	Ground	Drive	Drive	Drive
0.4	Float	Ground	Drive	Drive
0.5	Float	Float	**Drive**	Ground
0.6	Float	Drive	Ground	Ground
0.643	Drive	Ground	Ground	Ground
0.692	Drive	Ground	Float	Ground
0.714	Drive	Ground	Drive	Ground
0.75	Float	Drive	Float	Ground
0.769	Drive	Ground	Drive	Float
0.786	Drive	Ground	Drive	Drive
0.8	Float	Drive	Drive	Ground
0.818	Drive	Float	Ground	Ground
0.857	Drive	Drive	Ground	Ground
0.9	Drive	Float	Float	Ground
0.909	Drive	Float	Drive	Ground
0.923	Drive	Drive	Float	Ground
0.929	Drive	Drive	Drive	Ground
1	Drive	Drive	Drive	Drive

APPLICATIONS INFORMATION

Inverting Configuration

The inverting amplifier, shown in Figure 8, is another classical op amp configuration. The circuit is actually identical to the noninverting amplifier of Figure 4, except that V_{IN} and GND have been swapped. The list of available gains is shown in Table 3, and some of the circuits are shown in Figure 9. Noise gain is 1+|Gain|, as is the usual case for inverting amplifiers. Again, for the best DC performance, match the source impedance seen by the op amp inputs.

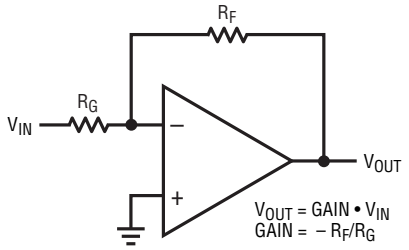

CLASSICAL INVERTING OP AMP CONFIGURATION.
YOU PROVIDE THE RESISTORS.

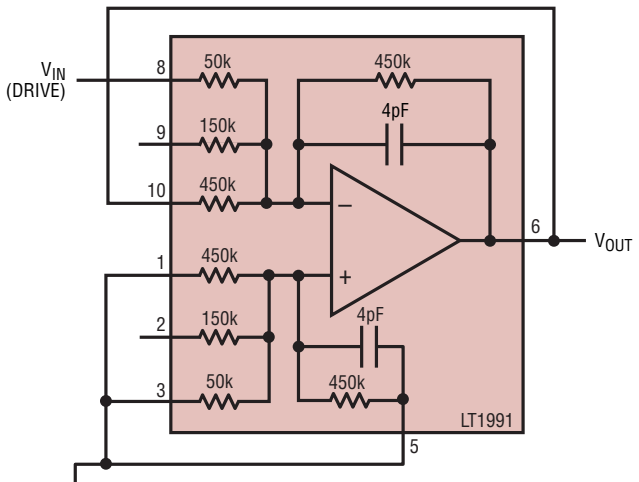

CLASSICAL INVERTING OP AMP CONFIGURATION IMPLEMENTED WITH LT1991. R_F = 225k, R_G = 50k, GAIN = –4.5.

GAIN IS ACHIEVED BY GROUNDING, FLOATING OR FEEDING BACK THE AVAILABLE RESISTORS TO ARRIVE AT DESIRED R_F AND R_G.

WE PROVIDE YOU WITH <0.1% RESISTORS.

1991 F08

Figure 8. The LT1991 as a Classical Inverting Op Amp. Note the Circuit Is Identical to the Noninverting Amplifier, Except that V_{IN} and Ground Have Been Swapped

Table 3. Configuring the M Pins for Simple Inverting Gains

	M9, M3, M1 Connection		
Gain	**M9**	**M3**	**M1**
–0.077	Output	Output	Drive
–0.1	Output	Float	Drive
–0.25	Float	Output	Drive
–0.273	Output	Drive	Output
–0.3	Output	Drive	Float
–0.4	Output	Drive	Drive
–1	Float	Float	Drive
–1.5	Float	Drive	Output
–1.8	Drive	Output	Output
–2.25	Drive	Output	Float
–2.5	Drive	Output	Drive
–3	Float	Drive	Float
–4	Float	Drive	Drive
–4.5	Drive	Float	Output
–6	Drive	Drive	Output
–9	Drive	Float	Float
–10	Drive	Float	Drive
–12	Drive	Drive	Float
–13	Drive	Drive	Drive

APPLICATIONS INFORMATION

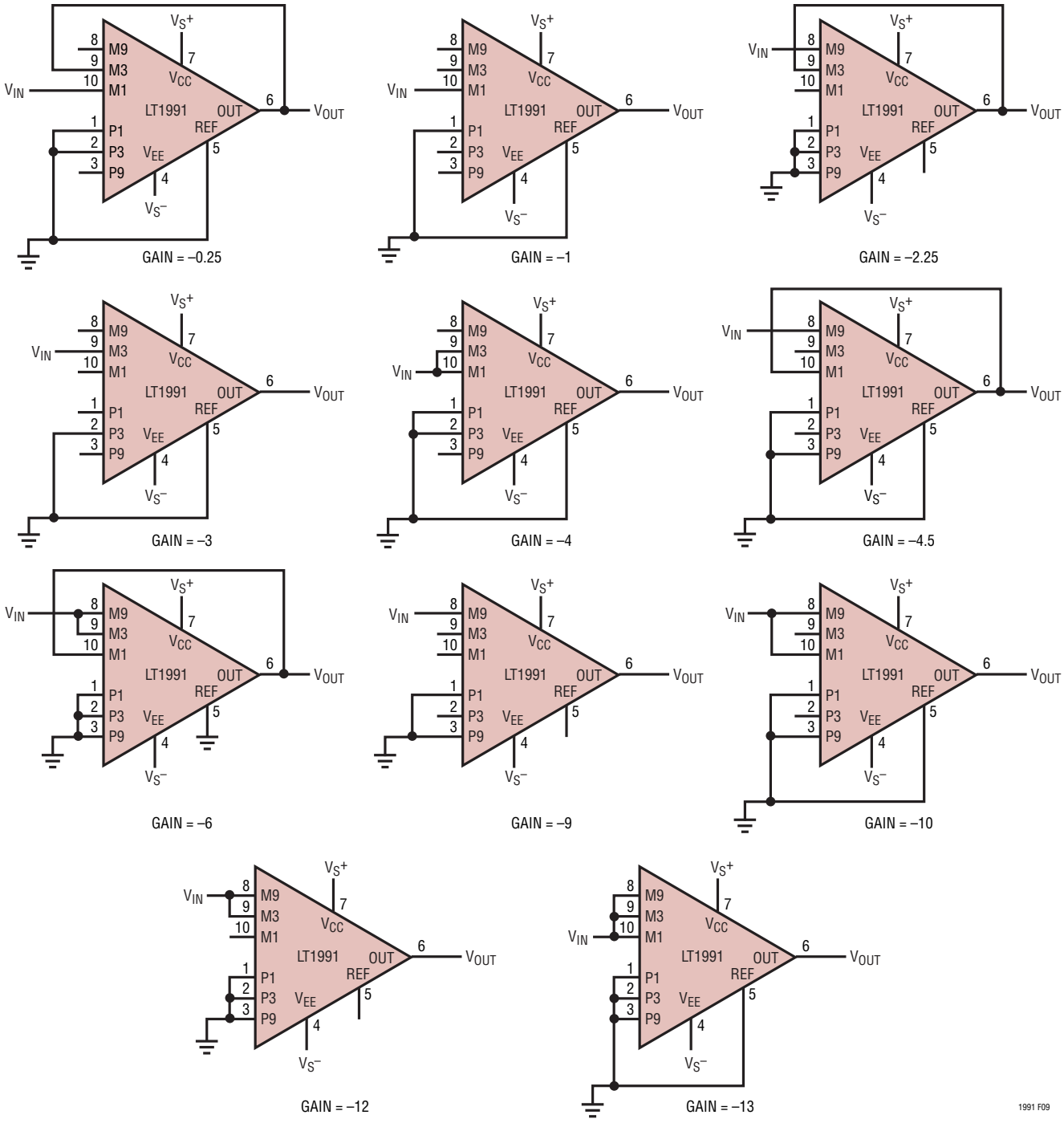

Figure 9. It Is Simple to Get Precision Inverting Gains with the LT1991. Input Impedance Varies from 45kΩ (Gain = –13) to 450kΩ (Gain = –1)

APPLICATIONS INFORMATION

Difference Amplifiers

The resistors in the LT1991 allow it to easily make difference amplifiers also. Figure 10 shows the basic 4-resistor difference amplifier and the LT1991. A difference gain of 3 is shown, but notice the effect of the additional dashed connections. By connecting the 450k resistors in parallel, the gain is reduced by a factor of 2. Of course, with so many resistors, there are many possible gains. Table 4 shows the difference gains and how they are achieved. Note that, as for inverting amplifiers, the noise gain is 1 more than the signal gain.

Table 4. Connections Giving Difference Gains for the LT1991

Gain	V_{IN}^+	V_{IN}^-	Output	GND (REF)
0.077	P1	M1	M3, M9	P3, P9
0.1	P1	M1	M9	P9
0.25	P1	M1	M3	P3
0.273	P3	M3	M1, M9	P1, P9
0.3	P3	M3	M9	P9
0.4	P1, P3	M1, M3	M9	P9
1	P1	M1		
1.5	P3	M3	M1	P1
1.8	P9	M9	M1, M3	P1, P3
2.25	P9	M9	M3	P3
2.5	P1, P9	M1, M9	M3	P3
3	P3	M3		
4	P1, P3	M1, M3		
4.5	P9	M9	M1	P1
6	P3, P9	M3, M9	M1	P1
9	P9	M9		
10	P1, P9	M1, M9		
12	P3, P9	M3, M9		
13	P1, P3, P9	M1, M3, M9		

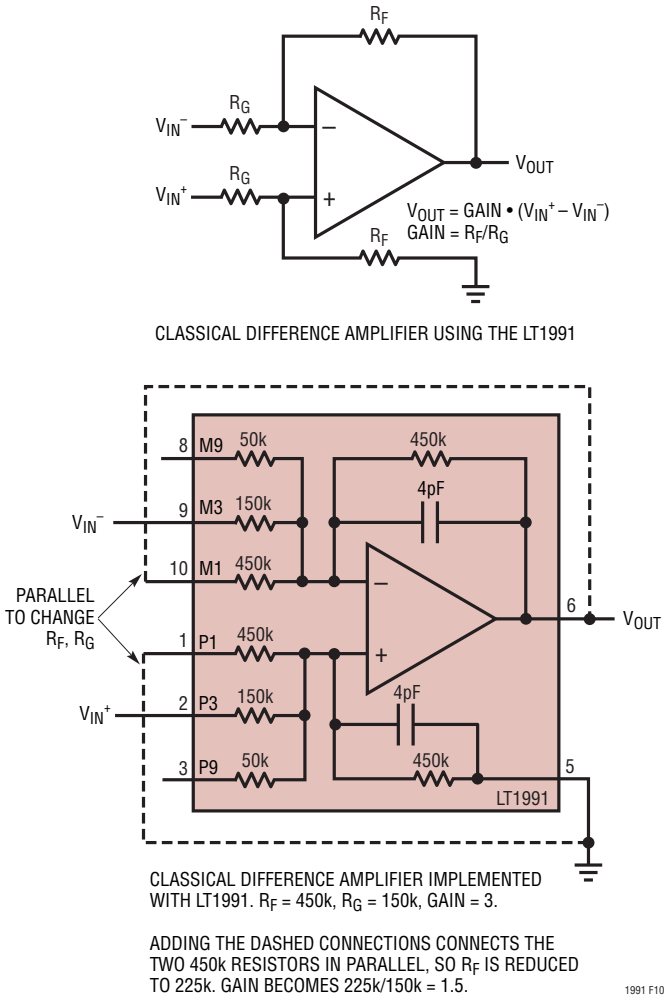

Figure 10. Difference Amplifier Using the LT1991. Gain Is Set Simply by Connecting the Correct Resistors or Combinations of Resistors. Gain of 3 Is Shown, with Dashed Lines Modifying It to Gain of 1.5. Noise Gain Is Optimal

APPLICATIONS INFORMATION

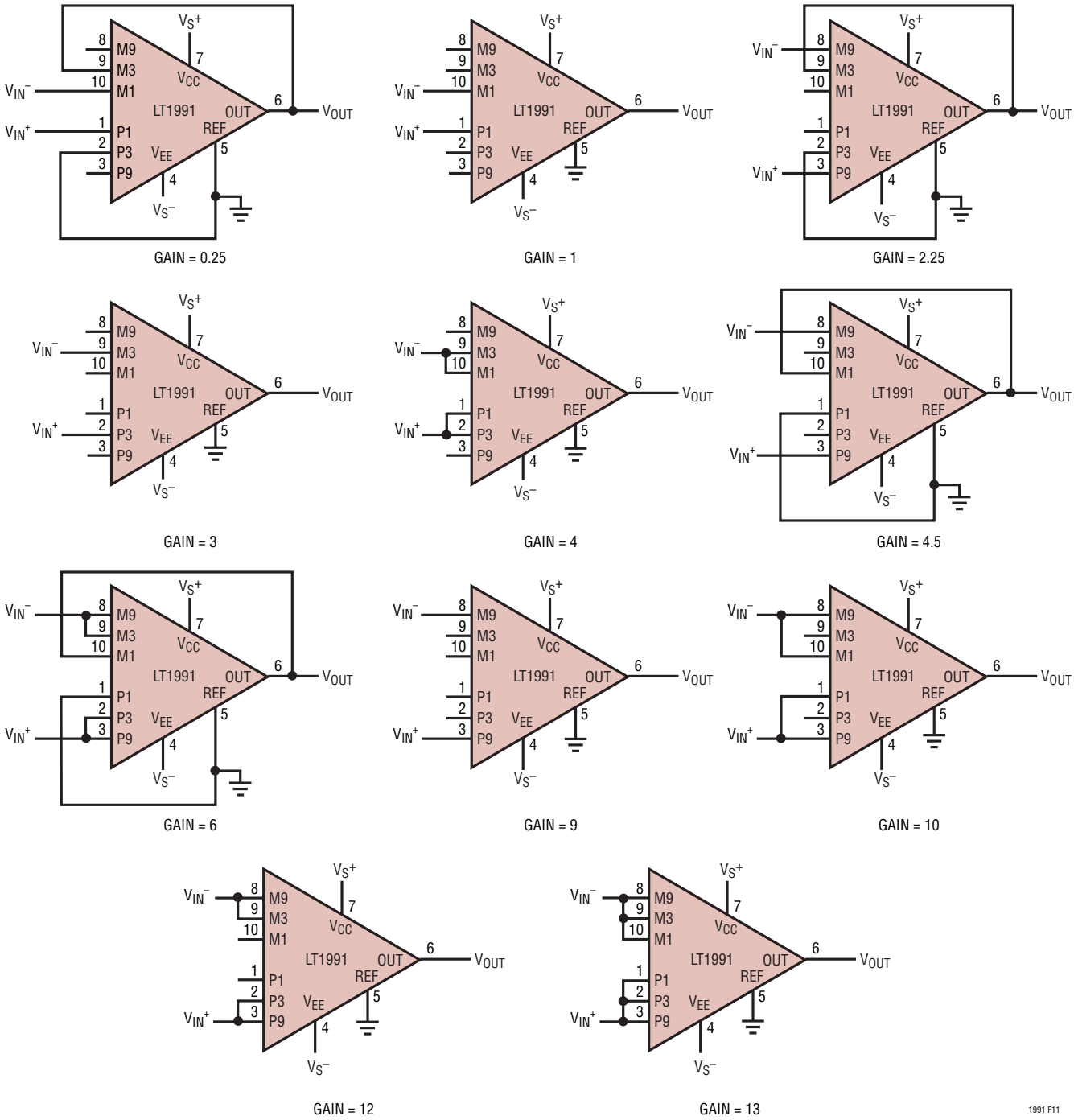

Figure 11. Many Difference Gains Are Achievable Just by Strapping the Pins

APPLICATIONS INFORMATION

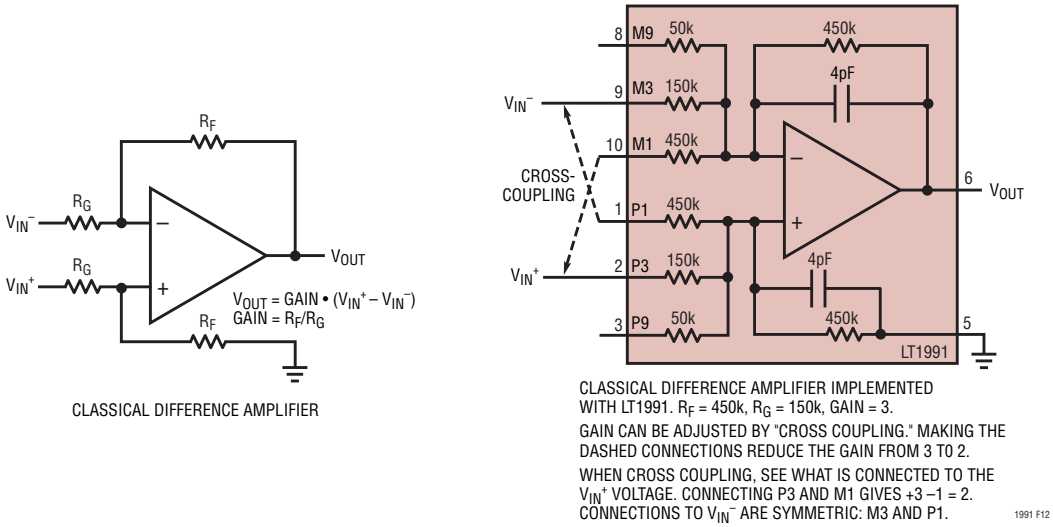

Figure 12. Another Method of Selecting Difference Gain Is "Cross-Coupling." The Additional Method Means the LT1991 Provides All Integer Gains from 1 to 13

Difference Amplifier: Additional Integer Gains Using Cross-Coupling

Figure 12 shows the basic difference amplifier as well as the LT1991 in a difference gain of 3. But notice the effect of the additional dashed connections. This is referred to as "cross-coupling" and has the effect of reducing the differential gain from 3 to 2. Using this method, additional integer gains are achievable, as shown in Table 5 below, so that all integer gains from 1 to 13 are achieved with the LT1991. Note that the equations can be written by inspection from the V_{IN}^+ connections, and that the V_{IN}^- connections are simply the opposite (swap P for M and M for P). Noise gain, bandwidth, and input impedance specifications for the various cases are also tabulated, as these are not obvious. Schematics are provided in Figure 13.

Table 5. Connections Using Cross-Coupling. Note That Equations Can Be Written by Inspection of the V_{IN}^+ Column

Gain	V_{IN}^+	V_{IN}^-	Equation	Noise Gain	–3dB BW kHz	R_{IN}^+ Typ kΩ	R_{IN}^- Typ kΩ
2	P3, M1	M3, P1	3 – 1	5	70	281	141
5	P9, M3, M1	M9, P3, P1	9 – 3 – 1	14	32	97	49
6*	P9, M3	M9, P3	9 – 3	13	35	122	49
7	P9, P1, M3	M9, M1, P3	9 + 1 – 3	14	32	121	44
8	P9, M1	M9, P1	9 – 1	11	38	248	50
11	P9, P3, M1	M9, M3, P1	9 + 3 – 1	14	32	242	37

*Gain of 6 is better implemented as shown previously, but is included here for completeness.

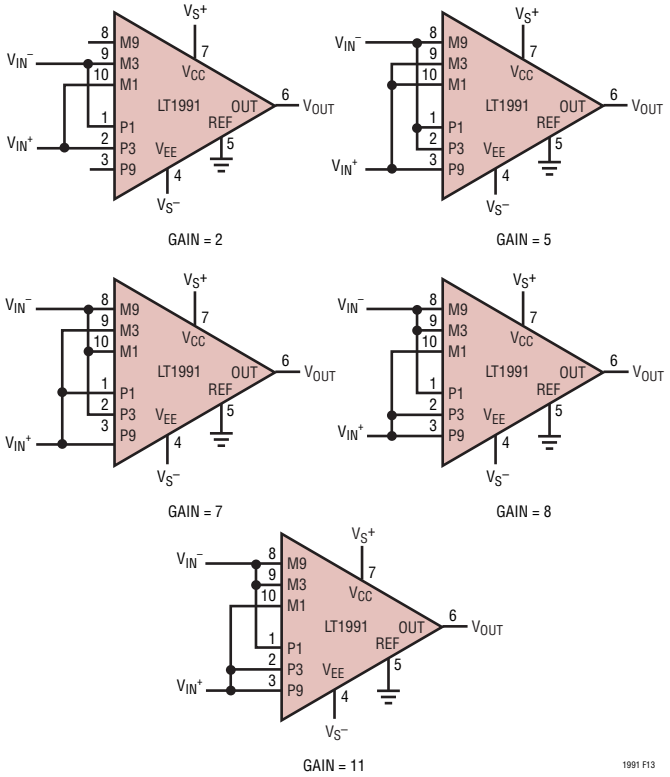

Figure 13. Integer Gain Difference Amplifiers Using Cross-Coupling

APPLICATIONS INFORMATION

High Voltage CM Difference Amplifiers

This class of difference amplifier remains to be discussed. Figure 14 shows the basic circuit on the top. The effective input voltage range of the circuit is extended by the fact that resistors R_T attenuate the common mode voltage seen by the op amp inputs. For the LT1991, the most useful resistors for R_G are the M1 and P1 450kΩ resistors, because they do not have diode clamps to the supplies and therefore can be taken outside the supplies. As before, the input CM of the op amp is the limiting factor and is set by the voltage at the op amp +input, V_{INT}. By superposition we can write:

$$V_{INT} = V_{EXT} \bullet (R_F||R_T)/(R_G + R_F||R_T) + V_{REF} \bullet (R_G||R_T)/(R_F + R_G||R_T) + V_{TERM} \bullet (R_F||R_G)/(R_T + R_F||R_G)$$

Solving for V_{EXT}:

$$V_{EXT} = (1 + R_G/(R_F||R_T)) \bullet (V_{INT} - V_{REF} \bullet (R_G||R_T)/(R_F + R_G||R_T) - V_{TERM} \bullet (R_F||R_G)/(R_T + R_F||R_G))$$

Given the values of the resistors in the LT1991, this equation has been simplified and evaluated, and the resulting equations provided in Table 6. As before, substituting $V_{CC} - 1.2$ and $V_{EE} + 1$ for V_{LIM} will give the valid upper and lower common mode extremes respectively. Following are sample calculations for the case shown in Figure 14, right-hand side. Note that P9 and M9 are terminated so row 3 of Table 6 provides the equation:

$$\text{MAX } V_{EXT} = 11 \bullet (V_{CC} - 1.2V) - V_{REF} - 9 \bullet V_{TERM}$$
$$= 11 \bullet (10.8V) - 2.5 - 9 \bullet 12 = 8.3V$$

and:

$$\text{MIN } V_{EXT} = 11 \bullet (V_{EE} + 1V) - V_{REF} - 9 \bullet V_{TERM}$$
$$= 11 \bullet (1V) - 2.5 - 9 \bullet 12 = -99.5V$$

but this exceeds the 60V absolute maximum rating of the P1, M1 pins, so –60V becomes the de facto negative common mode limit. Several more examples of high CM circuits are shown in Figures 15, 16, 17 for various supplies.

Table 6. HighV CM Connections Giving Difference Gains for the LT1991

Gain	V_{IN}^+	V_{IN}^-	R_T	Noise Gain	Max, Min V_{EXT} (Substitute $V_{CC} - 1.2$, $V_{EE} + 1$ for V_{LIM})
1	P1	M1		2	$2 \bullet V_{LIM} - V_{REF}$
1	P1	M1	P3, M3	5	$5 \bullet V_{LIM} - V_{REF} - 3 \bullet V_{TERM}$
1	P1	M1	P9, M9	11	$11 \bullet V_{LIM} - V_{REF} - 9 \bullet V_{TERM}$
1	P1	M1	P3||P9 M3||M9	14	$14 \bullet V_{LIM} - V_{REF} - 12 \bullet V_{TERM}$

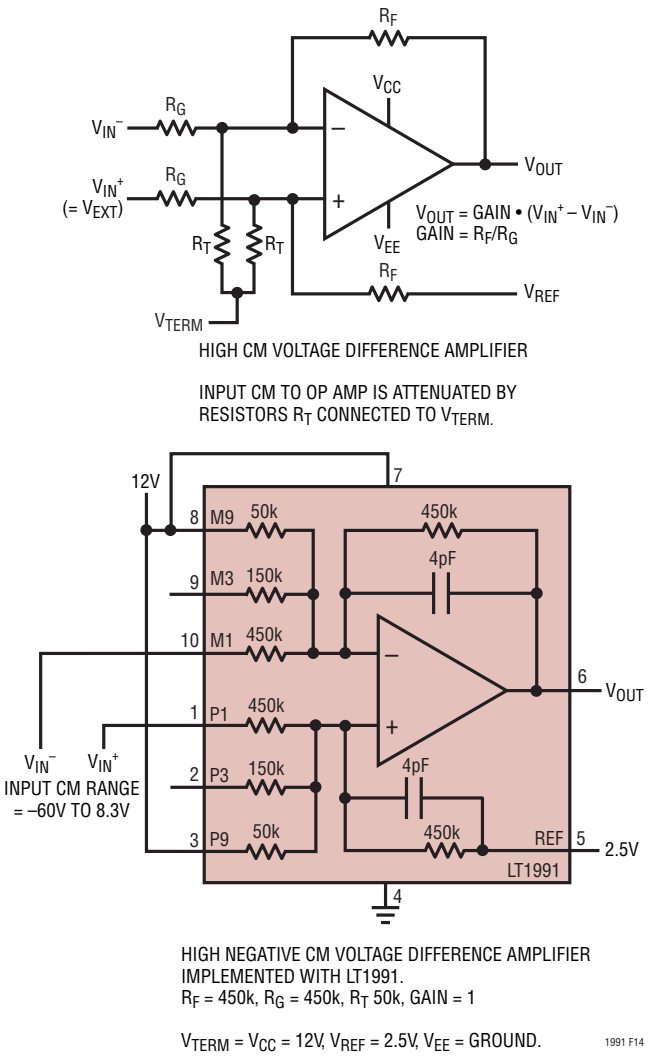

Figure 14. Extending CM Input Range

APPLICATIONS INFORMATION

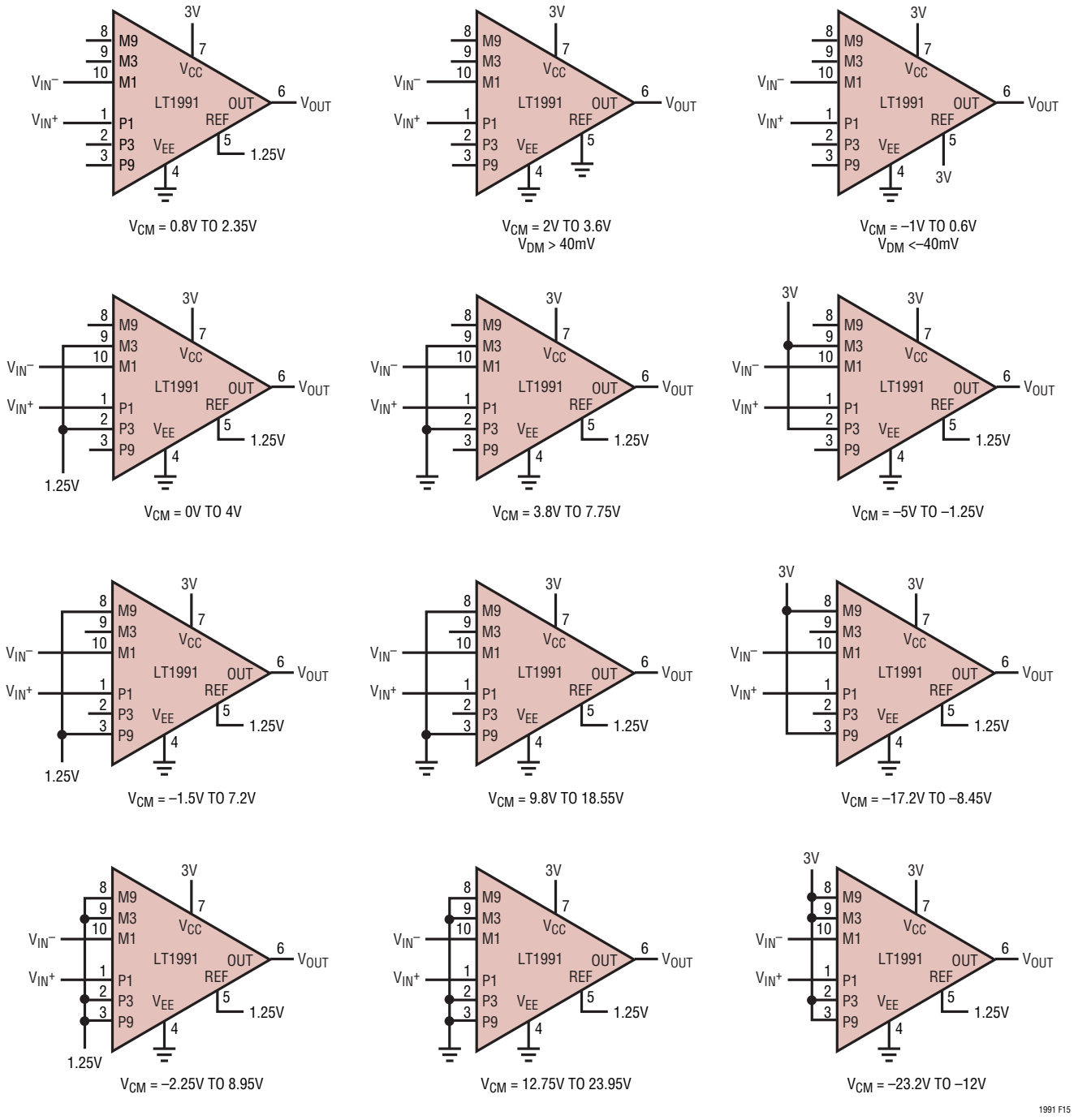

Figure 15. Common Mode Ranges for Various LT1991 Configurations on V_S = 3V, 0V; with Gain = 1

APPLICATIONS INFORMATION

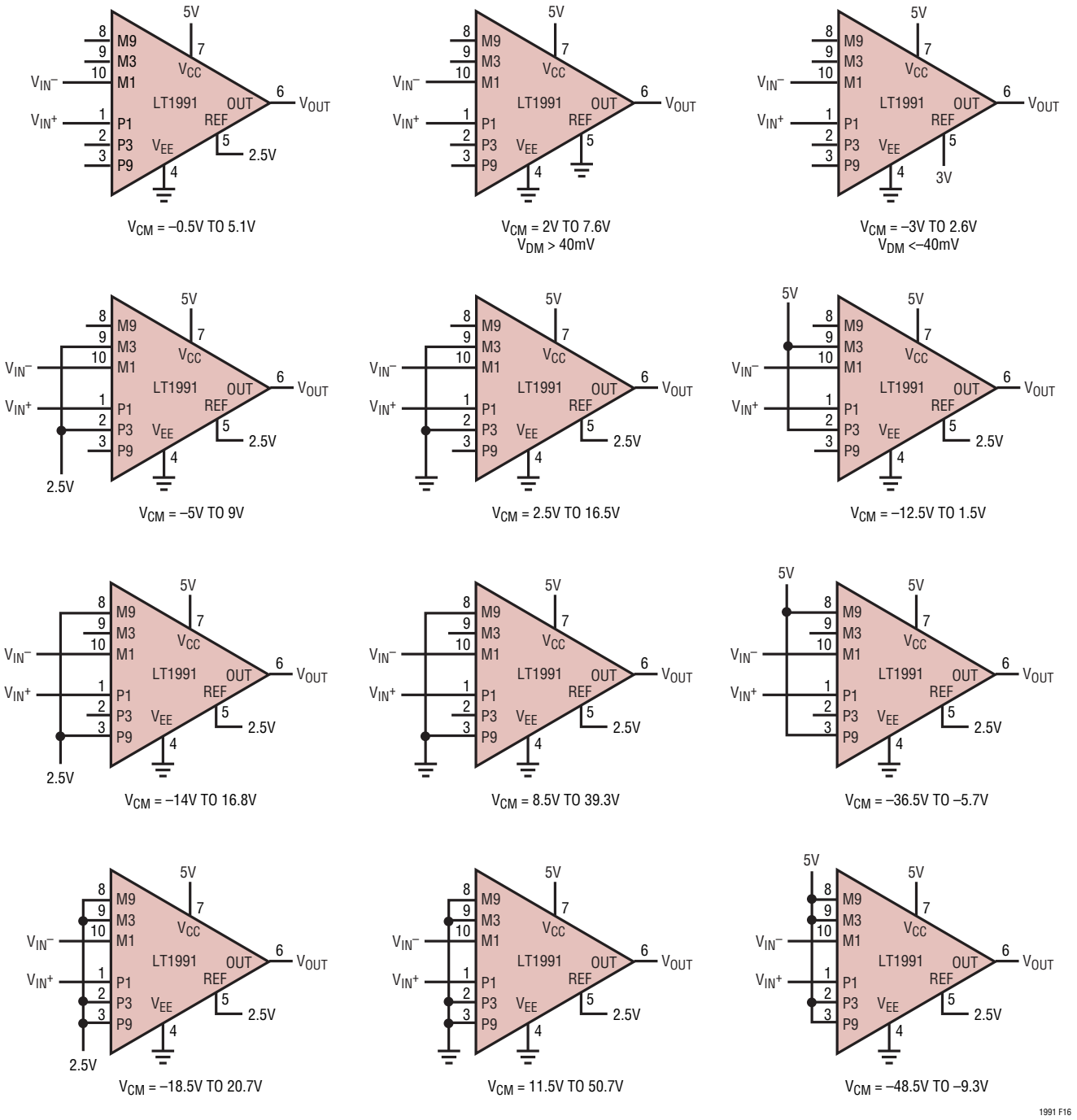

Figure 16. Common Mode Ranges for Various LT1991 Configurations on V_S = 5V, 0V; with Gain = 1

APPLICATIONS INFORMATION

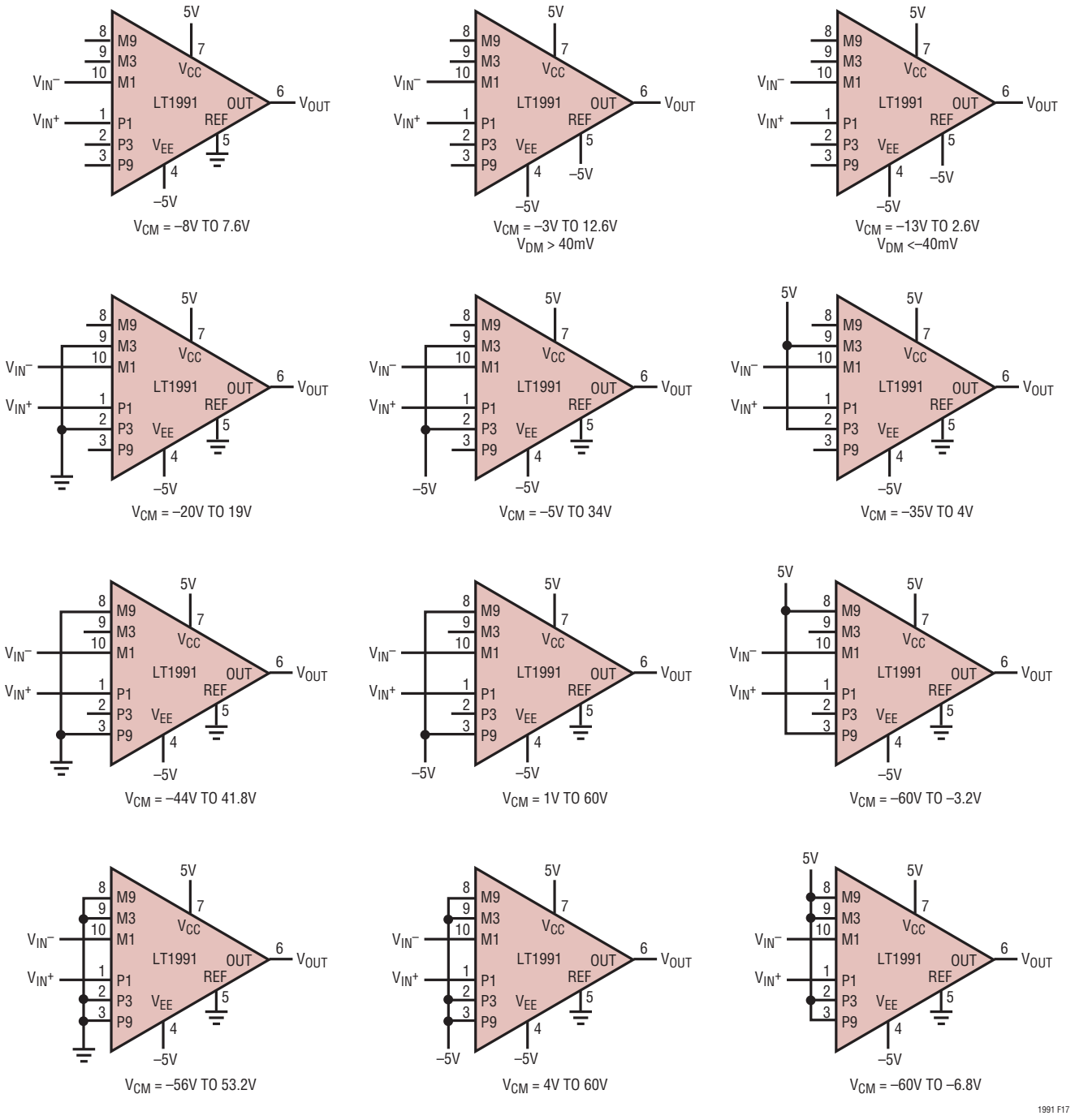

Figure 17. Common Mode Ranges for Various LT1991 Configurations on V_S = ±5V, with Gain = 1

TYPICAL APPLICATIONS

Micropower A_V = 10 Instrumentation Amplifier

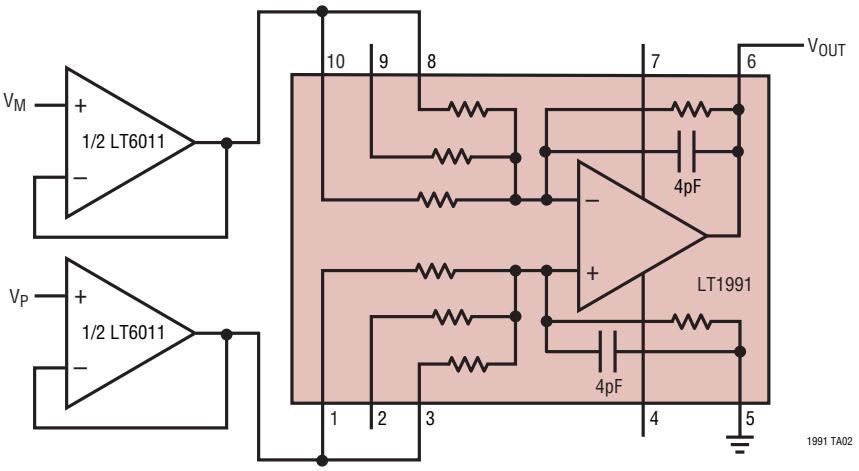

PACKAGE DESCRIPTION

Please refer to http://www.linear.com/designtools/packaging/ for the most recent package drawings.

DD Package
10-Lead Plastic DFN (3mm × 3mm)
(Reference LTC DWG # 05-08-1699 Rev C)

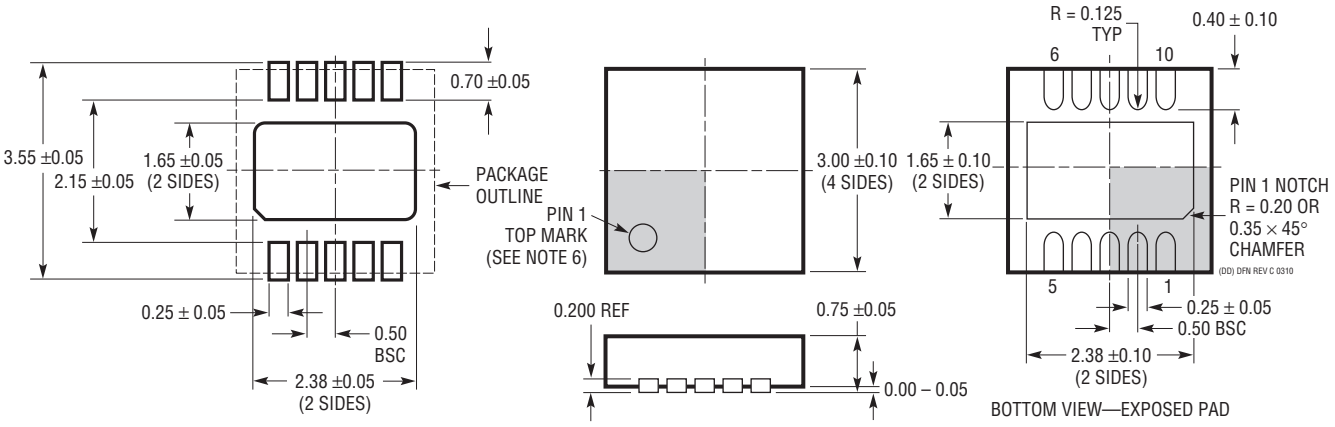

RECOMMENDED SOLDER PAD PITCH AND DIMENSIONS

NOTE:
1. DRAWING TO BE MADE A JEDEC PACKAGE OUTLINE M0-229 VARIATION OF (WEED-2). CHECK THE LTC WEBSITE DATA SHEET FOR CURRENT STATUS OF VARIATION ASSIGNMENT
2. DRAWING NOT TO SCALE
3. ALL DIMENSIONS ARE IN MILLIMETERS
4. DIMENSIONS OF EXPOSED PAD ON BOTTOM OF PACKAGE DO NOT INCLUDE MOLD FLASH. MOLD FLASH, IF PRESENT, SHALL NOT EXCEED 0.15mm ON ANY SIDE
5. EXPOSED PAD SHALL BE SOLDER PLATED
6. SHADED AREA IS ONLY A REFERENCE FOR PIN 1 LOCATION ON THE TOP AND BOTTOM OF PACKAGE

PACKAGE DESCRIPTION

Please refer to http://www.linear.com/designtools/packaging/ for the most recent package drawings.

MS Package
10-Lead Plastic MSOP
(Reference LTC DWG # 05-08-1661 Rev E)

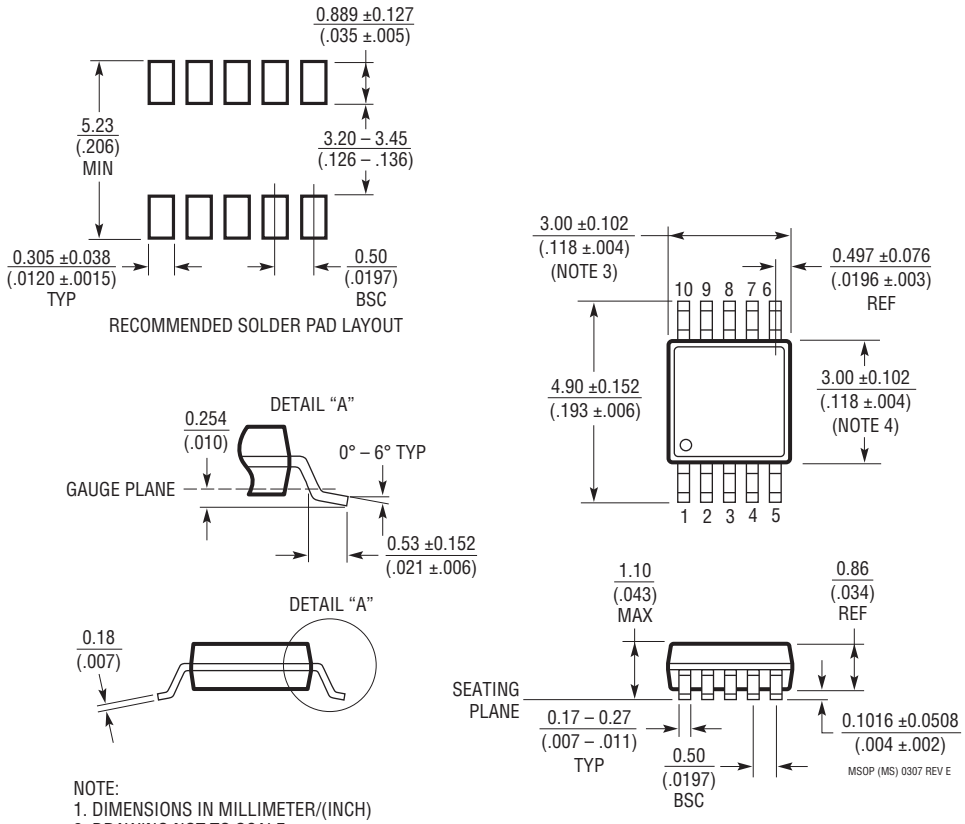

NOTE:
1. DIMENSIONS IN MILLIMETER/(INCH)
2. DRAWING NOT TO SCALE
3. DIMENSION DOES NOT INCLUDE MOLD FLASH, PROTRUSIONS OR GATE BURRS.
   MOLD FLASH, PROTRUSIONS OR GATE BURRS SHALL NOT EXCEED 0.152mm (.006") PER SIDE
4. DIMENSION DOES NOT INCLUDE INTERLEAD FLASH OR PROTRUSIONS.
   INTERLEAD FLASH OR PROTRUSIONS SHALL NOT EXCEED 0.152mm (.006") PER SIDE
5. LEAD COPLANARITY (BOTTOM OF LEADS AFTER FORMING) SHALL BE 0.102mm (.004") MAX

REVISION HISTORY (Revision history begins at Rev H)

REV	DATE	DESCRIPTION	PAGE NUMBER
H	5/12	Corrected specified temperature range for C-grade parts in the Order Information table.	2
		Corrected V_{CM} = –20V to 19V and V_{CM} = –5V to 34V configurations in Figure 17.	24
		Updated Related Parts Table	28

Information furnished by Linear Technology Corporation is believed to be accurate and reliable. However, no responsibility is assumed for its use. Linear Technology Corporation makes no representation that the interconnection of its circuits as described herein will not infringe on existing patent rights.

TYPICAL APPLICATION

Bidirectional Current Source

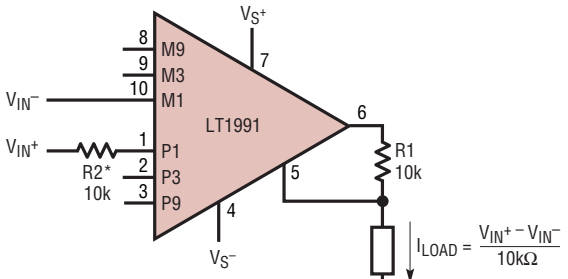

*SHORT R2 FOR LOWEST OUTPUT OFFSET CURRENT. INCLUDE R2 FOR HIGHEST OUTPUT IMPEDANCE.

Single Supply AC Coupled Amplifier

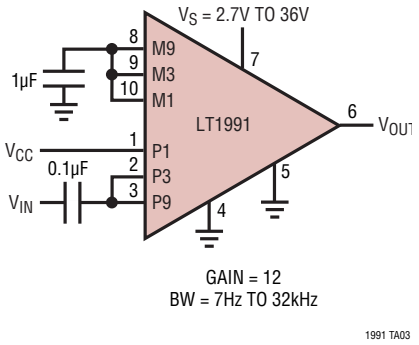

Ultra-Stable Precision Attenuator

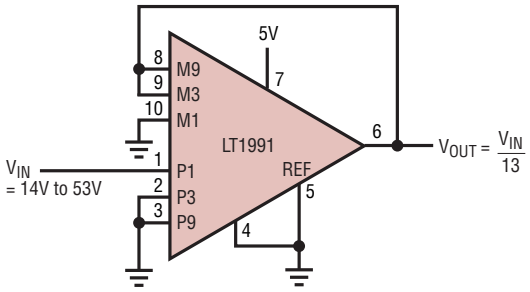

Analog Level Adaptor

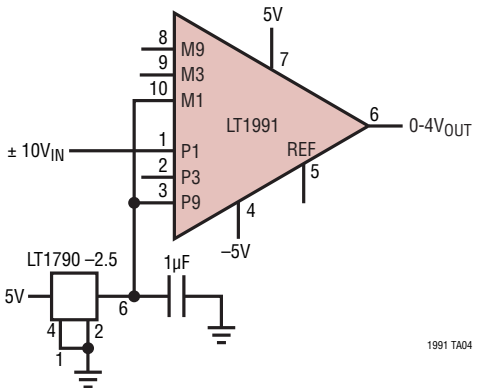

RELATED PARTS

PART NUMBER	DESCRIPTION	COMMENTS
LT1990	High Voltage, Gain Selectable Difference Amplifier	±250V Common Mode, Micropower, Pin Selectable Gain = 1, 10
LT1996	Precision Gain Selectable Difference Amplifier	Micropower, Pin Selectable Up to Gain = 118
LT1995	High Speed, Gain Selectable Difference Amplifier	30MHz, 1000V/µs, Pin Selectable Gain = –7 to 8
LT6010/LT6011/ LT6012	Single/Dual/Quad 135µA 14nV/√Hz Rail-to-Rail Out Precision Op Amp	Similar Op Amp Performance as Used in LT1991 Difference Amplifier
LT6013/LT6014	Single/Dual 145µA 8nV/√Hz Rail-to-Rail Out Precision Op Amp	Lower Noise $A_V \geq 5$ Version of LT1991 Type Op Amp
LTC6910-X	Programmable Gain Amplifiers	3 Gain Configurations, Rail-to-Rail Input and Output
LT1999	High Voltage Bidirectional Current Sense Amplifier	CMRR > 80dB at 100kHz
LT5400	Quad Matched Resistor Network	0.01% Matching, CMRR > 86dB

Linear Technology Corporation
1630 McCarthy Blvd., Milpitas, CA 95035-7417
(408) 432-1900 • FAX: (408) 434-0507 • www.linear.com

LT 0512 REV H • PRINTED IN USA

© LINEAR TECHNOLOGY CORPORATION 2006

Looking for pricing, stock, or lifecycle information?

Click below to explore more details on WIN SOURCE:

- View LT1991IDD#TRPBF on WIN SOURCE
- Analog Devices Inc. Information

Optimize Your Supply Chain with WIN SOURCE Solutions

- Global Sourcing Solution
- Obsolete Management
- Cost Control Management
- Shortage Management
- Alternative Solution
- Excess Inventory Management