THE DATASHEET OF

PV3WF2B0SS-3N4

PV3 Series Anti-vandal Switch

Applications / Markets

Audio / Visual

Security Devices

Industrial Controls

Kiosks

Electrical Housewares

Medical Equipment

Specifications

Electrical Rating: 2A, 48VDC
Mechanical Life: 200,000 Cycles
Electrical Life: 50,000 Cycles
Contact Resistance: 50mΩ Max.
Insulation Resistance: 1000MΩ Max.
Operating/Storage Temperature: -20°C to 55°C
Travel: 2.80mm
Moisture Protection: IP40 (PV3,PV3S) & IP67 (PV3W, PV3SW)
Contact Arrangement: SPDT & DPDT
Actuation Force: 4 N
Panel Thickness: 1-8mm
Mounting Nut Torque: 0.6Nm

Features & Benefits

- **16mm diameter panel cutout**
- **Dot and ring illumination options**
- **Multiple actuator options**
- **Non-sealed and seal option configurable**
- **SPDT & DPDT**
- **Soldered wire leads (300mm long) optional**

Part Number Configurator

Series	Actuator Options	Terminal Options	Function Options	Rating Options	Body Finish Options	Actuator Finish Options	Contact Material Options	Lens Style Options	Lens Color Options	Illumination Voltage Options
PV3 - Non Water-Resistant Version: Long Body **PV3S -** Non Water-Resistant Version: Short Body *Non-Illuminated only* **PV3W -** Water-Resistant Version: Long Body **PV3SW -** Water-Resistant Version: Short Body *Non-Illuminated only*	**F** - Flat **H** - High **G** - Guarded Concave	**2** - Solder **W** - Wire Leads 300mm	**B** - 1 Pole On - (On)* **H** - 2 Pole On - (On)*	**0** - 2A, 48VDC	**1** - Black Anodized **N** - Nickel **B** - Brushed Stainless **S** - Polished Stainless	**0** - Clear/ Aluminum **1** - Black Anodized **7** - Blue **8** - Green **9** - Red **N** - Nickel **B** - Brushed Stainless **S** - Polished Stainless	**NONE** - Silver **G** - Gold	**NONE** - Non-Illuminated **2** - Dot Illumination **3** - Ring Illumination	**NONE**- Non-Illuminated **0** - White **1** - Red **2** - Orange **3** - Green **4** - Blue **5** - Yellow	**NONE**- Non-Illuminated **1** - Base Voltage‡ **3** - 6V **4** - 12V **5** - 24V **6** - 125V

NOTES:
*( ) denotes function is momentary
‡Base voltage for LED colors red, yellow, and orange is 1.8V @ 20mA
‡Base voltage for LED colors blue, green and white is 2.8V @ 20mA

Specifications subject to change without notice 9.1.2022

Body Dimensions

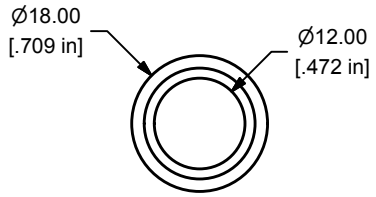

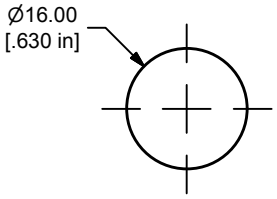

MAX. PANEL
THICKNESS 1-8.0mm

Panel Cutout

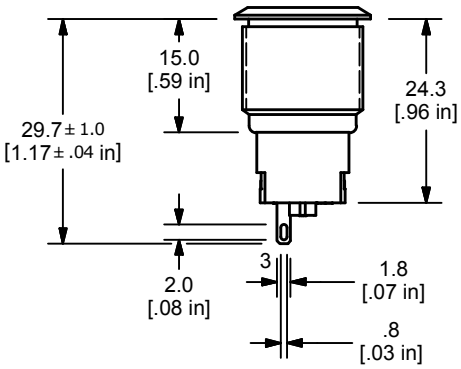

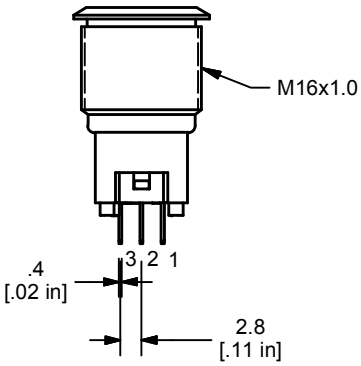

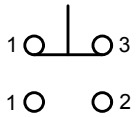

SPDT ON-(ON)
CONTACT CONFIGURATION
(MOMENTARY)

Schematic

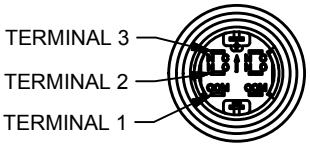

Short Body

Body Dimensions

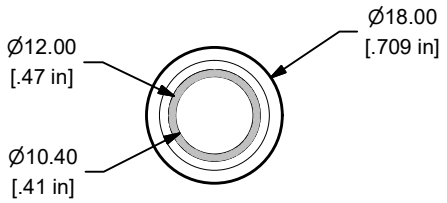

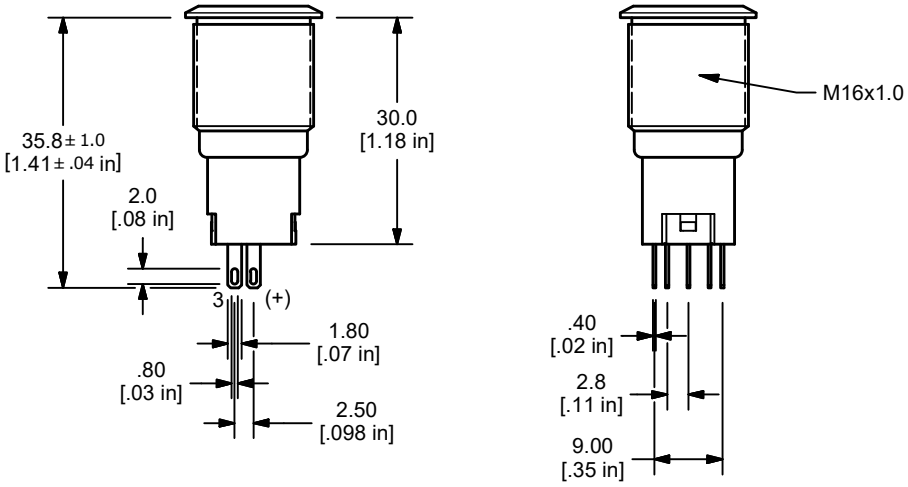

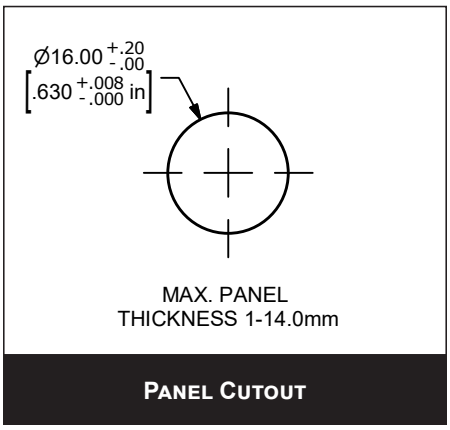

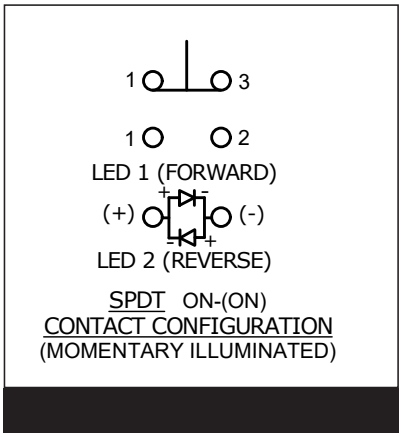

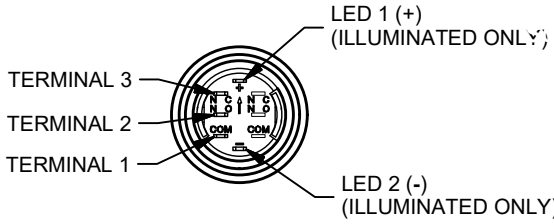

Long Body

Body Dimensions

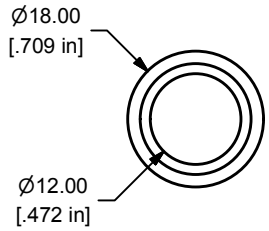

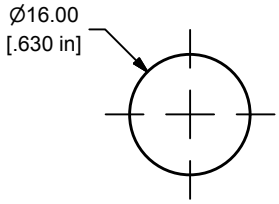

MAX. PANEL
THICKNESS 1-8.0mm

Panel Cutout

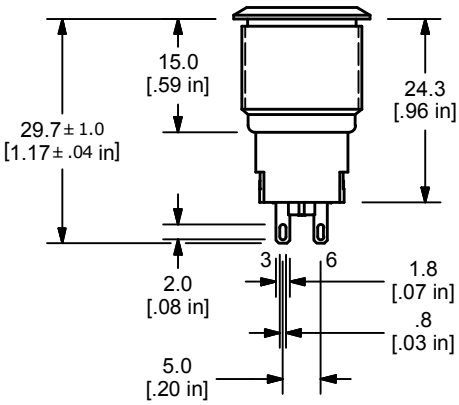

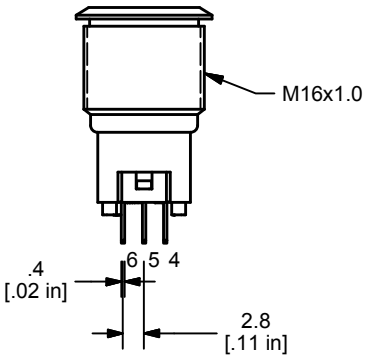

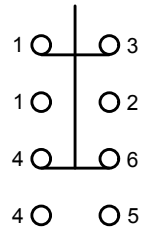

DPDT ON-(ON)
CONTACT CONFIGURATION

Schematic

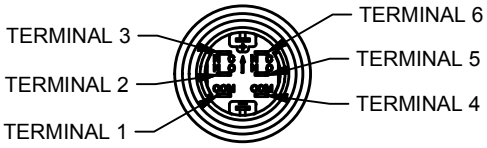

Short Body

Body Dimensions

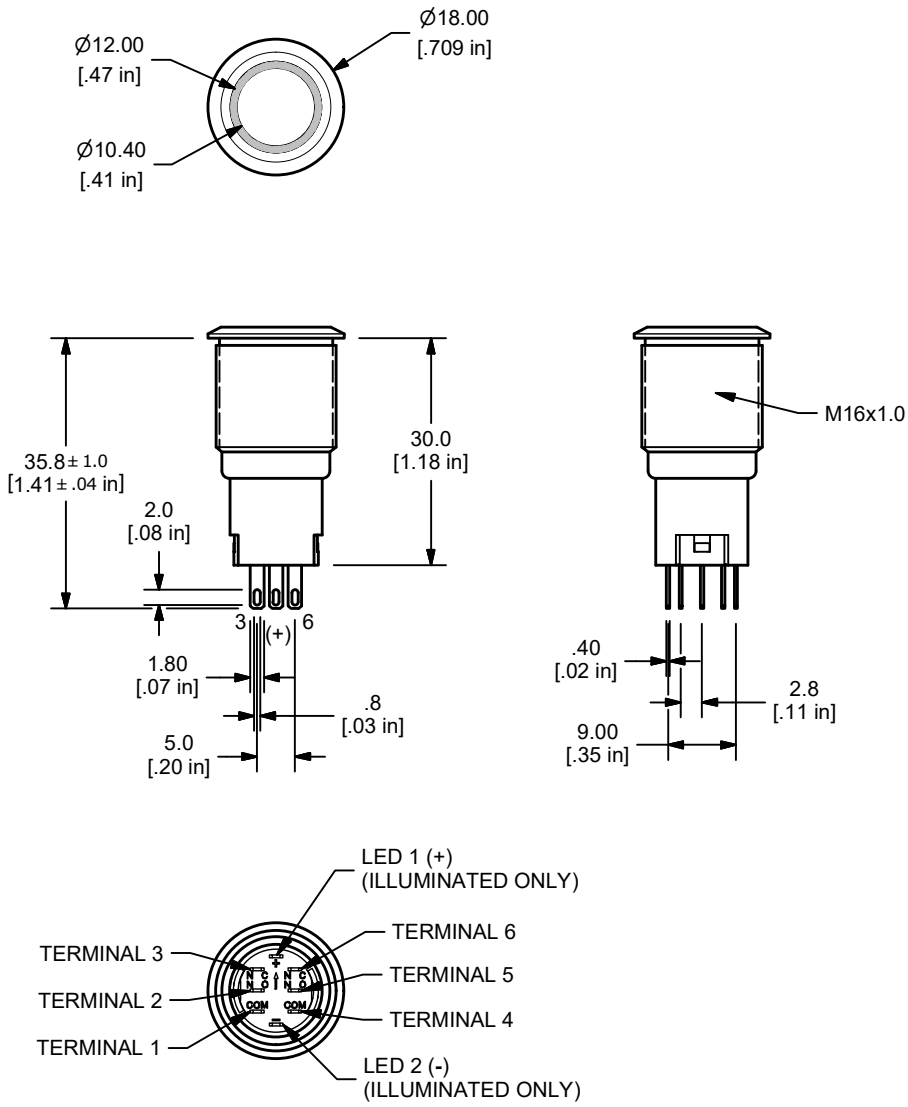

Long Body

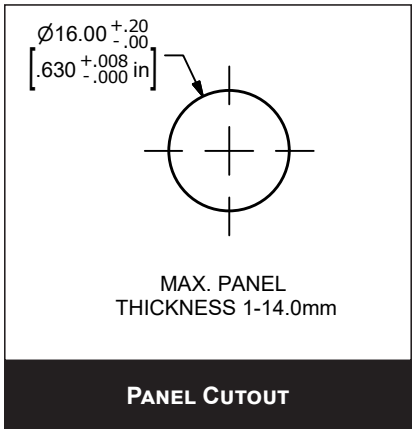

Panel Cutout

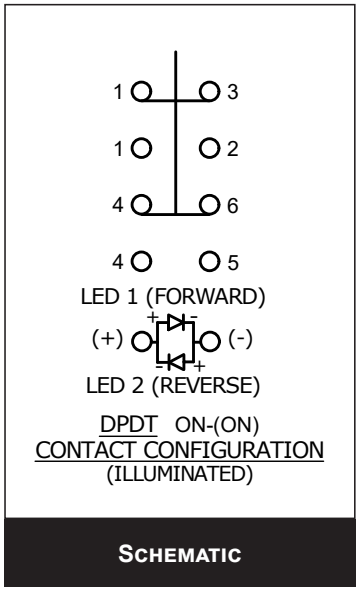

Schematic

Illumination Options

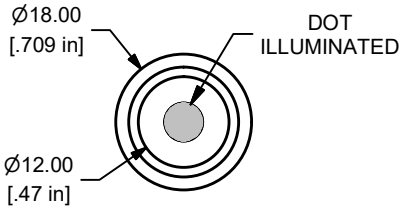

Dot Illuminated

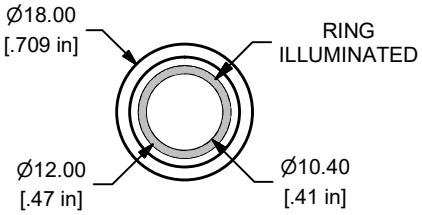

Ring Illuminated

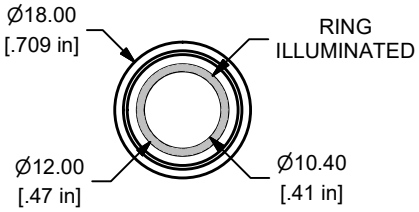

Ring Illuminated
With Guarded Concave Actuator

Actuator Options

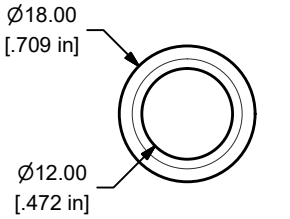

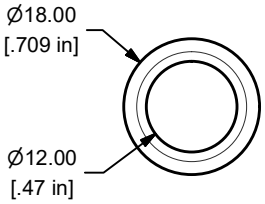

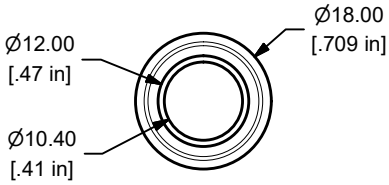

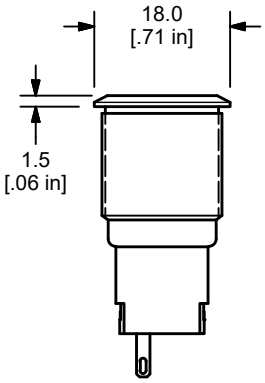

Flat Actuator

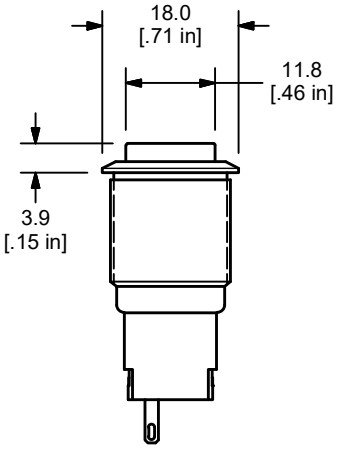

High Actuator

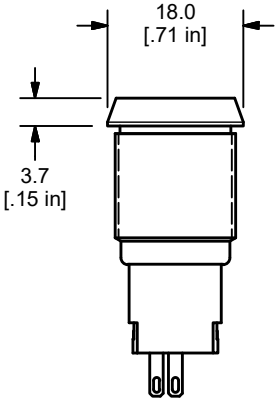

Guarded Concave

Standard LED Wire Lead

SWITCH	WIRE	LENGTH
SW1-1	WIRE, 22AWG AWM UL1007, YELLOW	300.0 [11.8 in]
SW1-2	WIRE, 22AWG AWM UL1007, BLUE	300.0 [11.8 in]
SW1-3	WIRE, 22AWG AWM UL1007, GREEN	300.0 [11.8 in]
SW1-4	WIRE, 22AWG AWM UL1007, PURPLE	300.0 [11.8 in]
SW1-5	WIRE, 22AWG AWM UL1007, ORANGE	300.0 [11.8 in]
SW1-6	WIRE, 22AWG AWM UL1007, WHITE	300.0 [11.8 in]
SW1- (+)	WIRE, 22AWG AWM UL1007, RED	300.0 [11.8 in]
SW1- (-)	WIRE, 22AWG AWM UL1007, BLACK	300.0 [11.8 in]

** WIRE LEADS PROVIDED ARE DEPENDANT ON THE FUNCTION AND/OR ILLUMINATION SELECTED **

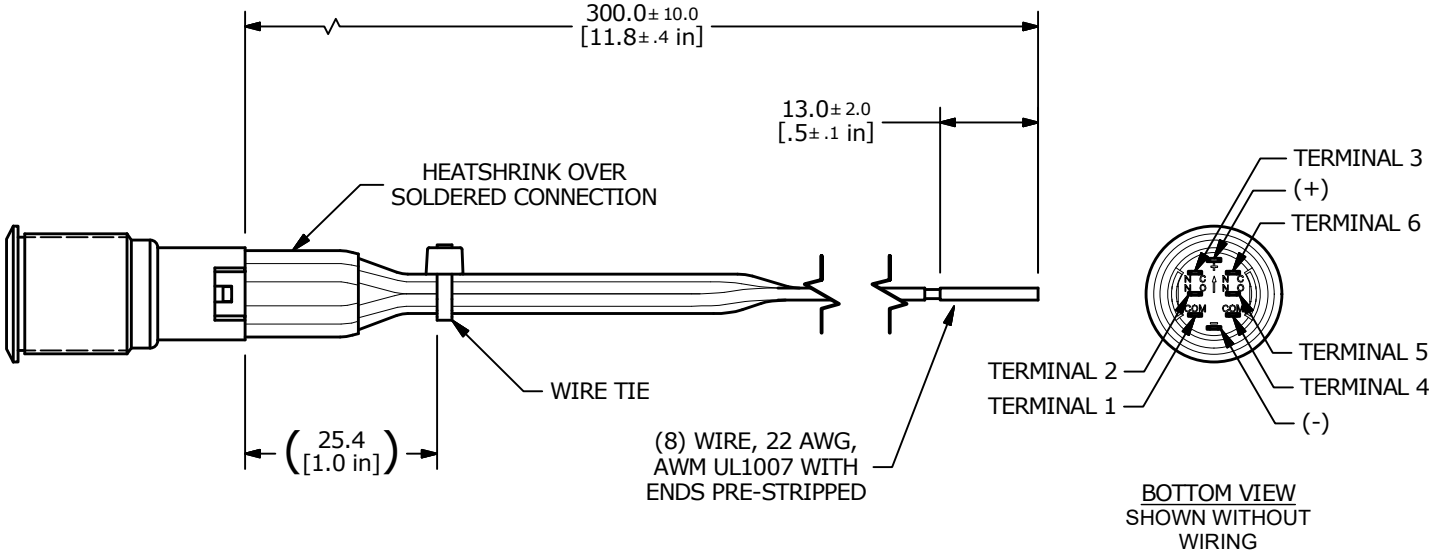

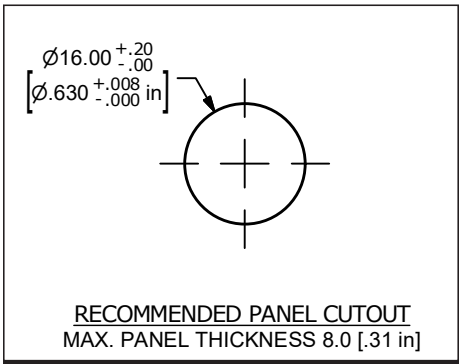

Panel Cutout

Looking for pricing, stock, or lifecycle information?

Click below to explore more details on WIN SOURCE:

- View PV3WF2B0SS-3N4 on WIN SOURCE
- E-Switch Information

Optimize Your Supply Chain with WIN SOURCE Solutions

- Global Sourcing Solution
- Obsolete Management
- Cost Control Management
- Shortage Management
- Alternative Solution
- Excess Inventory Management