THE DATASHEET OF

TPS2046BD

www.win-source.net 0086-755-83957316

CURRENT-LIMITED, POWER-DISTRIBUTION SWITCHES

FEATURES

- **70-mΩ High-Side MOSFET**
- **250-mA Continuous Current**
- **Thermal and Short-Circuit Protection**
- **Accurate Current Limit (0.3 A min, 0.7 A max)**
- **Operating Range: 2.7 V to 5.5 V**
- **0.6-ms Typical Rise Time**
- **Undervoltage Lockout**
- **Deglitched Fault Report ($\overline{OC}$)**
- **No $\overline{OC}$ Glitch During Power Up**
- **Maximum Standby Supply Current: 1-µA (Single and Dual) or 2-µA (Triple)**
- **Bidirectional Switch**
- **Ambient Temperature Range: –40°C to 85°C**
- **ESD Protection**
- **UL Pending**

APPLICATIONS

- **Heavy Capacitive Loads**
- **Short-Circuit Protections**

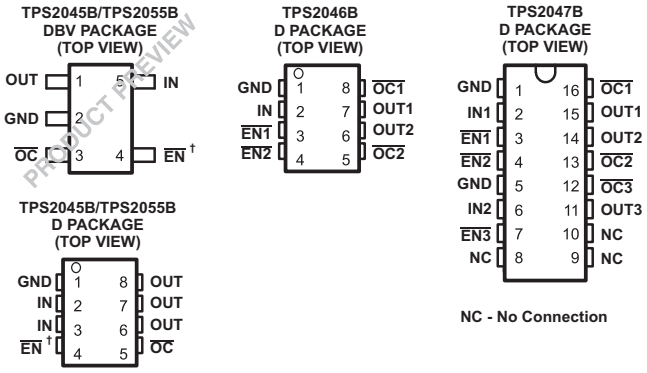

†All enable inputs are active high (EN) for the TPS2055B.

DESCRIPTION

The TPS204xB/TPS2055B power-distribution switches are intended for applications where heavy capacitive loads and short circuits are likely to be encountered. These devices incorporate 70-mΩ N-channel MOSFET power switches for power-distribution systems that require multiple power switches in a single package. Each switch is controlled by a logic-enable input. Gate drive is provided by an internal charge pump designed to control the power-switch rise times and fall times to minimize current surges during switching. The charge pump requires no external components and allows operation from supplies as low as 2.7 V.

When the output load exceeds the current-limit threshold or a short is present, the device limits the output current to a safe level by switching into a constant-current mode, pulling the overcurrent ($\overline{OCx}$) logic output low. When continuous heavy overloads and short-circuits increase the power dissipation in the switch, causing the junction temperature to rise, a thermal protection circuit shuts off the switch to prevent damage. Recovery from a thermal shutdown is automatic once the device has cooled sufficiently. Internal circuitry ensures that the switch remains off until valid input voltage is present. This power-distribution switch is designed to set current limit at 0.5 A typically.

GENERAL SWITCH CATALOG

33 mΩ, Single	80 mΩ, Single	80 mΩ, Dual	80 mΩ, Dual	80 mΩ, Triple	80 mΩ, Quad	80 mΩ, Quad
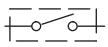	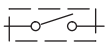	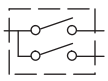	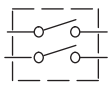	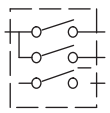	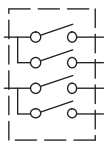	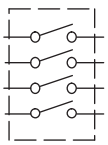
TPS201xA 0.2 A to 2 A	TPS2014 600 mA	TPS2042B 500 mA	TPS2080 500 mA	TPS2043B 500 mA	TPS2044B 500 mA	TPS2085 500 mA
TPS202x 0.2 A to 2 A	TPS2015 1 A	TPS2052B 500 mA	TPS2081 500 mA	TPS2053B 500 mA	TPS2054B 500 mA	TPS2086 500 mA
TPS203x 0.2 A to 2 A	TPS2041B 500 mA	TPS2046B 250 mA	TPS2082 500 mA	TPS2047B 250 mA	TPS2048A 250 mA	TPS2087 500 mA
	TPS2051B 500 mA	TPS2056 250 mA	TPS2090 250 mA	TPS2057A 250 mA	TPS2058 250 mA	TPS2095 250 mA
	TPS2045A 250 mA	TPS2062 1 A	TPS2091 250 mA	TPS2063 1 A		TPS2096 250 mA
	TPS2049 100 mA	TPS2066 1 A	TPS2092 250 mA	TPS2067 1 A		TPS2097 250 mA
	TPS2055A 250 mA	TPS2060 1.5 A				
	TPS2061 1 A	TPS2064 1.5 A				
	TPS2065 1 A					
	TPS2068 1.5 A					
	TPS2069 1.5 A					

Please be aware that an important notice concerning availability, standard warranty, and use in critical applications of Texas Instruments semiconductor products and disclaimers thereto appears at the end of this data sheet.

UNLESS OTHERWISE NOTED this document contains PRODUCTION DATA information current as of publication date. Products conform to specifications per the terms of Texas Instruments standard warranty. Production processing does not necessarily include testing of all parameters.

Copyright © 2004–2007, Texas Instruments Incorporated

These devices have limited built-in ESD protection. The leads should be shorted together or the device placed in conductive foam during storage or handling to prevent electrostatic damage to the MOS gates.

AVAILABLE OPTIONS

T_A	ENABLE	RECOMMENDED MAXIMUM CONTINUOUS LOAD CURRENT (A)	TYPICAL SHORT-CIRCUIT CURRENT LIMIT AT 25°C (A)	NUMBER OF SWITCHES	PACKAGED (1)	DEVICES
–40°C to 85°C	Active low	0.25	0.5	Single	SOIC (D)	TPS4045BD
					SOT-23 (DBV)	TPS4045BDBV
	Active high	0.25	0.5	Single	SOIC (D)	TPS4055BD
					SOT-23 (DBV)	TPS4055BDBV
	Active low	0.25	0.5	Dual	SOIC (D)	TPS2046BD
				Triple	SOIC (D)	TPS2047BD

(1) The D package is available taped and reeled. Add an R suffix to device type (e.g., TPS2046BDR)

ABSOLUTE MAXIMUM RATINGS

over operating free-air temperature range unless otherwise noted(1)

			UNIT
$V_{I(IN)}$, $V_{I(INx)}$	Input voltage range(2)		–0.3 V to 6 V
$V_{O(OUTx)}$	Output voltage range (2)		–0.3 V to 6 V
$V_{I(/ENx)}$	Input voltage range		–0.3 V to 6 V
$V_{I(/OCx)}$	Voltage range		–0.3 V to 6 V
$I_{O(OUTx)}$	Continuous output current		Internally limited
	Continuous total power dissipation		See Dissipation Rating Table
T_J	Operating virtual junction temperature range		–40°C to 125°C
T_{stg}	Storage temperature range		–65°C to 150°C
ESD	Electrostatic discharge protection	Human body model MIL-STD-883C	2 kV
		Charge device model (CDM)	500 V

(1) Stresses beyond those listed under *absolute maximum ratings* may cause permanent damage to the device. These are stress ratings only, and functional operation of the device at these or any other conditions beyond those indicated under *recommended operating conditions* is not implied. Exposure to absolute-maximum-rated conditions for extended periods may affect device reliability.
(2) All voltages are with respect to GND.

DISSIPATING RATING TABLE

PACKAGE	$T_A \le 25°C$ POWER RATING	DERATING FACTOR ABOVE $T_A = 25°C$	$T_A = 70°C$ POWER RATING	$T_A = 85°C$ POWER RATING
D-8	585.82 mW	5.8582 mW/°C	322.2 mW	234.32 mW
D-16	898.47 mW	8.9847 mW/°C	494.15 mW	359.38 mW
DBV-5	308.6419 mW	3.086419 mW/°C	169.753 mW	123.4567 mW

Copyright © 2004–2007, Texas Instruments Incorporated

RECOMMENDED OPERATING CONDITIONS

		MIN	MAX	UNIT
$V_{I(IN)}$, $V_{I(INx)}$	Input voltage	2.7	5.5	V
$V_{I(/ENx)}$, $V_{I(ENx)}$	Input voltage	0	5.5	V
$I_{O(OUT)}$, $I_{O(OUTx)}$	Continuous output current	0	250	mA
T_J	Operating virtual junction temperature	-40	125	°C

ELECTRICAL CHARACTERISTICS

over recommended operating junction temperature range, $V_{I(IN)}$ = 5.5 V, I_O = 0.25 A, $V_{I(\overline{ENx})}$ = 0 V (unless otherwise noted)

PARAMETER		TEST CONDITIONS(1)			MIN	TYP	MAX	UNIT
POWER SWITCH								
$r_{DS(on)}$	Static drain-source on-state resistance, 5-V operation and 3.3-V operation	$V_{I(IN)}$ = 5 V or 3.3 V, I_O = 0.25 A		–40°C ≤ T_J≤ 125°C		70	135	mΩ
	Static drain-source on-state resistance, 2.7-V operation(2)	$V_{I(IN)}$ = 2.7 V,	I_O = 0.25 A	–40°C≤ T_J≤ 125°C		75	150	mΩ
t_r(2)	Rise time, output	$V_{I(IN)}$ = 5.5 V	C_L = 1 µF, R_L = 20 Ω	T_J = 25°C		0.6	1.5	ms
		$V_{I(IN)}$ = 2.7 V				0.4	1	
t_f(2)	Fall time, output	$V_{I(IN)}$ = 5.5 V			0.05		0.5	
		$V_{I(IN)}$ = 2.7 V			0.05		0.5	
ENABLE INPUT $\overline{ENx}$								
V_{IH}	High-level input voltage	2.7 V ≤ $V_{I(IN)}$ ≤ 5.5 V			2			V
V_{IL}	Low-level input voltage	2.7 V ≤ $V_{I(IN)}$ ≤ 5.5 V					0.8	
I_I	Input current	$V_{I(/ENx)}$ = 0 V or 5.5 V			-0.5		0.5	µA
t_{on}(2)	Turnon time	C_L = 100 µF, R_L = 20 Ω					3	ms
t_{off}(2)	Turnoff time	C_L = 100 µF, R_L = 20 Ω					10	
CURRENT LIMIT								
I_{OS}	Short-circuit output current	$V_{I(IN)}$ = 5 V, OUT connected to GND, device enabled into short-circuit			0.3	0.5	0.7	A
SUPPLY CURRENT (TPS2045B, TPS2055B)								
	Supply current, low-level output	No load on OUT, $V_{I(/ENx)}$ = 5.5 V or $V_{I(/ENx)}$ = 0 V		T_J = 25°C		0.5	1	µA
				–40°C ≤ T_J ≤ 125°C		0.5	5	
	Supply current, high-level output	No load on OUT, $V_{I(/ENx)}$ = 0 V or $V_{I(/ENx)}$ = 5.5 V		T_J = 25°C		43	60	µA
				–40°C ≤ T_J ≤ 125°C		43	70	
	Leakage current	OUT connected to ground, $V_{I(/ENx)}$ = 5.5 V, or $V_{I(ENx)}$ = 0 V		–40°C ≤ T_J ≤ 125°C		1		µA
	Reverse leakage current	$V_{I(OUTx)}$ = 5.5 V, IN = ground(2)		T_J = 25°C		0		µA
SUPPLY CURRENT (TPS2046B)								
Supply current, low-level output		No load on OUT, $V_{I(/ENx)}$ = 5.5 V		T_J = 25°C		0.5	1	µA
				–40°C ≤ T_J ≤ 125°C		0.5	5	
Supply current, high-level output		No load on OUT, $V_{I(/ENx)}$ = 0 V		T_J = 25°C		50	70	µA
				-40°C ≤ T_J ≤ 125°C		50	90	
Leakage current		OUT connected to ground, $V_{I(ENx)}$ = 5.5 V		-40°C ≤ T_J ≤ 125°C		1		µA
Reverse leakage current		$V_{I(OUTx)}$ = 5.5 V, IN = ground(2)		T_J = 25°C		0.2		µA

(1) Pulse-testing techniques maintain junction temperature close to ambient temperature; thermal effects must be taken into account separately.
(2) Not tested in production, specified by design.

Copyright © 2004–2007, Texas Instruments Incorporated

ELECTRICAL CHARACTERISTICS (continued)

over recommended operating junction temperature range, $V_{I(IN)}$ = 5.5 V, I_O = 0.25 A, $V_{I(\overline{ENx})}$ = 0 V (unless otherwise noted)

PARAMETER	TEST CONDITIONS[1]		MIN	TYP	MAX	UNIT
SUPPLY CURRENT (TPS2047B)						
Supply current, low-level output	No load on OUT, $V_{I(/ENx)}$ = 5.5 V	T_J = 25°C		0.5	2	µA
		–40°C ≤ T_J ≤ 125°C		0.5	10	
Supply current, high-level output	No load on OUT, $V_{I(/ENx)}$ = 0 V	T_J = 25°C		65	90	µA
		–40°C ≤ T_J ≤ 125°C		65	110	
Leakage current	OUT connected to ground, $V_{I(/ENx)}$ = 5.5 V	–40°C≤ T_J≤ 125°C		1		µA
Reverse leakage current	$V_{I(OUTx)}$ = 5.5 V, INx = ground[3]	T_J = 25°C		0.2		µA
UNDERVOLTAGE LOCKOUT						
Low-level input voltage, IN, INx			2		2.5	V
Hysteresis, IN, INx	T_J = 25°C			75		mV
OVERCURRENT $\overline{OC}$ and $\overline{OCx}$						
Output low voltage, $V_{OL(/OCx)}$	$I_{O(/OCx)}$ = 5 mA				0.4	V
Off-state current[3]	$V_{O(/OCx)}$ = 5 V or 3.3 V				1	µA
$\overline{OC}$ deglitch[3]	$\overline{OCx}$ assertion or deassertion		4	8	15	ms
THERMAL SHUTDOWN[4]						
Thermal shutdown threshold[3]			135			°C
Recovery from thermal shutdown[3]			125			°C
Hysteresis[3]				10		°C

(3) Not tested in production, specified by design.
(4) The thermal shutdown only reacts under overcurrent conditions.

Copyright © 2004–2007, Texas Instruments Incorporated

DEVICE INFORMATION

Terminal Functions (TPS2045B and TPS2055B)

TERMINAL					I/O	DESCRIPTION
	D PACKAGE		DBV PACKAGE			
NAME	TPS2045B	TPS2055B	TPS2045B	TPS2055B		
$\overline{EN}$	4	-	4	-	I	Enable input, logic low turns on power switch
EN	-	4	-	4	I	Enable input, logic high turns on power switch
GND	1	1	2	2		Ground
IN	2, 3	2, 3	5	5	I	Input voltage
$\overline{OC}$	5	5	3	3	O	Overcurrent open-drain output, active-low
OUT	6, 7, 8	6, 7, 8	1	1	O	Power-switch output

FUNCTIONAL BLOCK DIAGRAM (TPS2045B and TPS2055B)

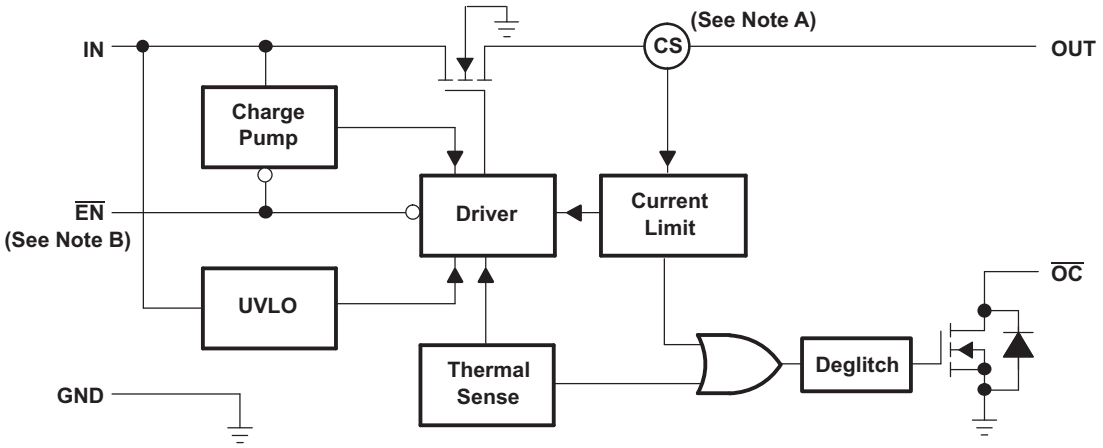

A. Current sense

B. Active low ($\overline{EN}$) for TPS2045B. Active high (EN) for TPS2055B.

Terminal Functions (TPS2046B)

TERMINAL		I/O	DESCRIPTION
NAME	NUMBER		
$\overline{EN1}$	3	I	Enable input, logic low turns on power switch IN-OUT1
$\overline{EN2}$	4	I	Enable input, logic low turns on power switch IN-OUT2
GND	1		Ground
IN	2	I	Input voltage
$\overline{OC1}$	8	O	Overcurrent, open-drain output, active low, IN-OUT1
$\overline{OC2}$	5	O	Overcurrent, open-drain output, active low, IN-OUT2
OUT1	7	O	Power-switch output, IN-OUT1
OUT2	6	O	Power-switch output, IN-OUT2

FUNCTIONAL BLOCK DIAGRAM (TPS2046B)

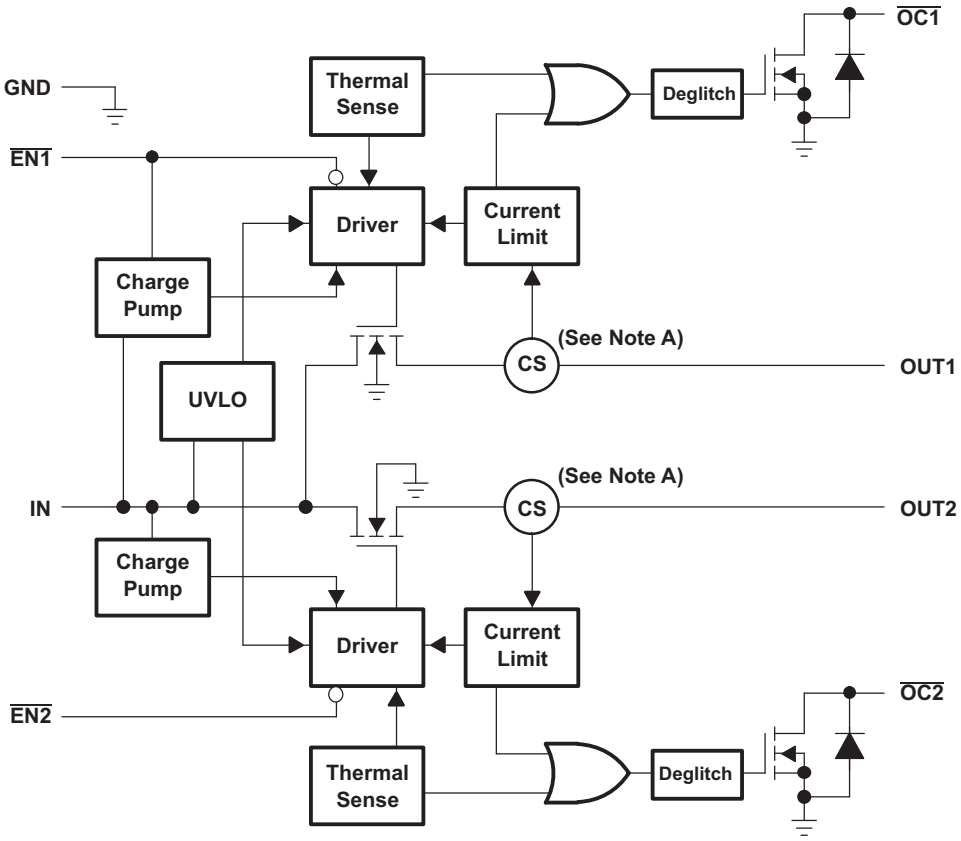

A. Current sense

Copyright © 2004–2007, Texas Instruments Incorporated

Terminal Functions (TPS2047B)

TERMINAL		I/O	DESCRIPTION
NAME	NUMBER		
$\overline{EN1}$	3	I	Enable input, logic low turns on power switch IN1-OUT1
$\overline{EN2}$	4	I	Enable input, logic low turns on power switch IN1-OUT2
$\overline{EN3}$	7	I	Enable input, logic low turns on power switch IN2-OUT3
GND	1, 5		Ground
IN1	2	I	Input voltage for OUT1 and OUT2
IN2	6	I	Input voltage for OUT3
NC	8, 9, 10		No connection
$\overline{OC1}$	16	O	Overcurrent, open-drain output, active low, IN1-OUT1
$\overline{OC2}$	13	O	Overcurrent, open-drain output, active low, IN1-OUT2
$\overline{OC3}$	12	O	Overcurrent, open-drain output, active low, IN2-OUT3
OUT1	15	O	Power-switch output, IN1-OUT1
OUT2	14	O	Power-switch output, IN1-OUT2
OUT3	11	O	Power-switch output, IN2-OUT3

FUNCTIONAL BLOCK DIAGRAM (TPS2047B)

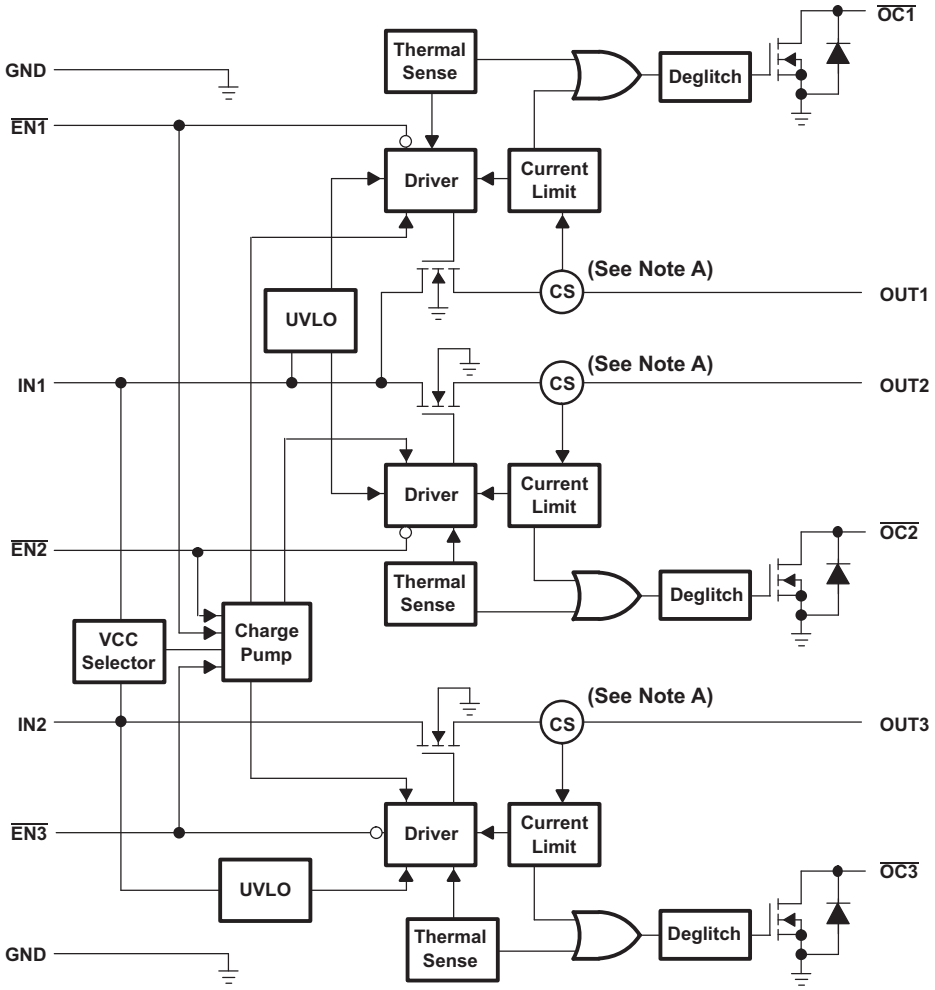

A. Current sense

PARAMETER MEASUREMENT INFORMATION

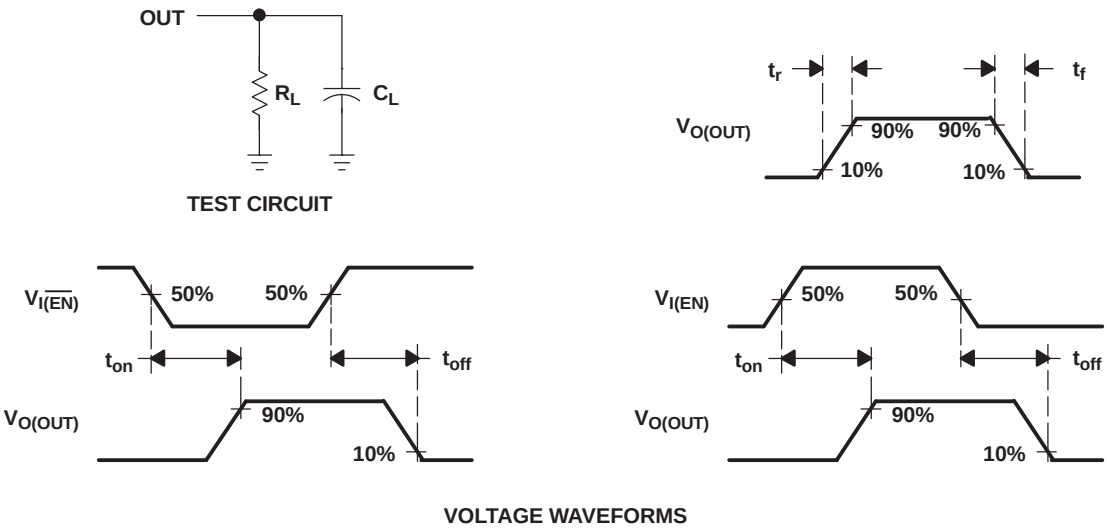

Figure 1. Test Circuit and Voltage Waveforms

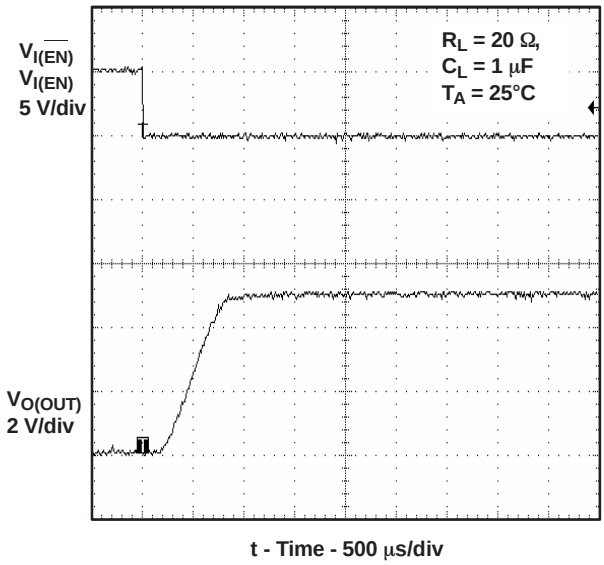

Figure 2. Turnon Delay and Rise Time With 1-µF Load

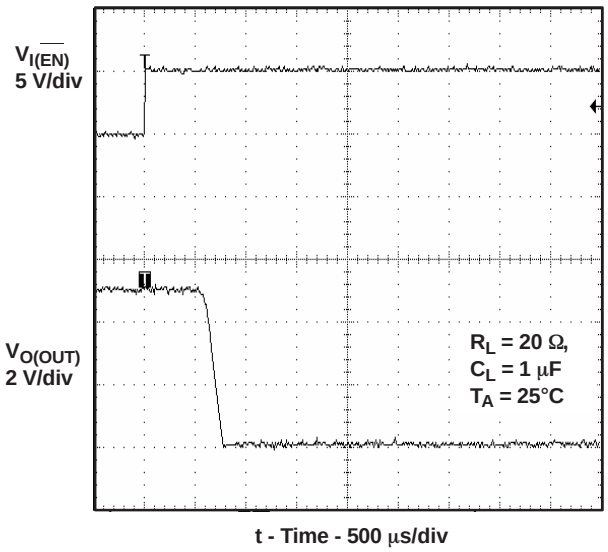

Figure 3. Turnoff Delay and Fall Time With 1-µF Load

Copyright © 2004–2007, Texas Instruments Incorporated

PARAMETER MEASUREMENT INFORMATION (continued)

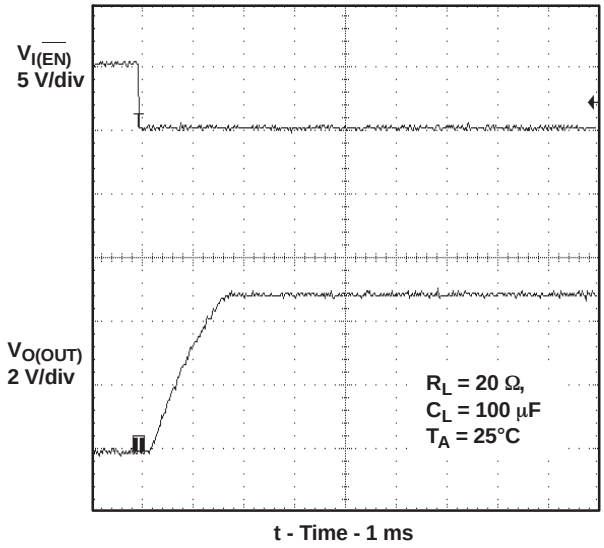

Figure 4. Turnon Delay and Rise Time With 100-µF Load

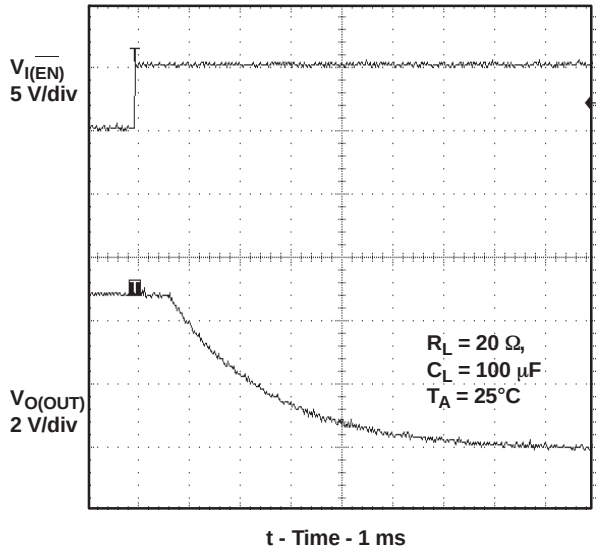

Figure 5. Turnoff Delay and Fall Time With 100-µF Load

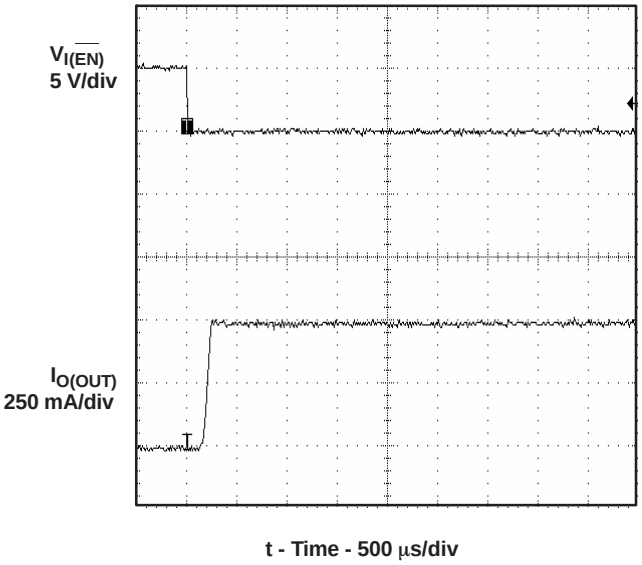

Figure 6. Short-Circuit Current, Device Enabled Into Short

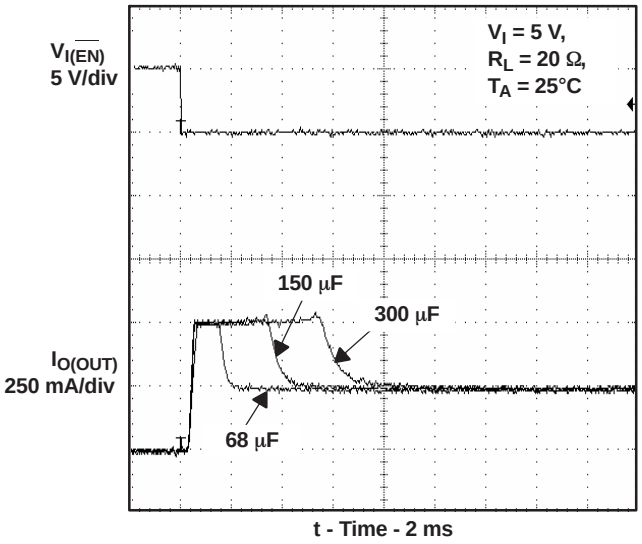

Figure 7. Inrush Current With Different Load Capacitance

PARAMETER MEASUREMENT INFORMATION (continued)

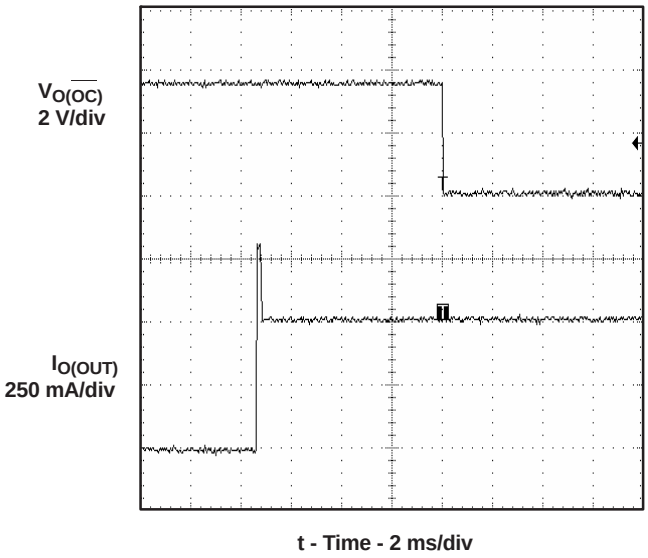

Figure 8. 4-Ω Load Connected to Enabled Device

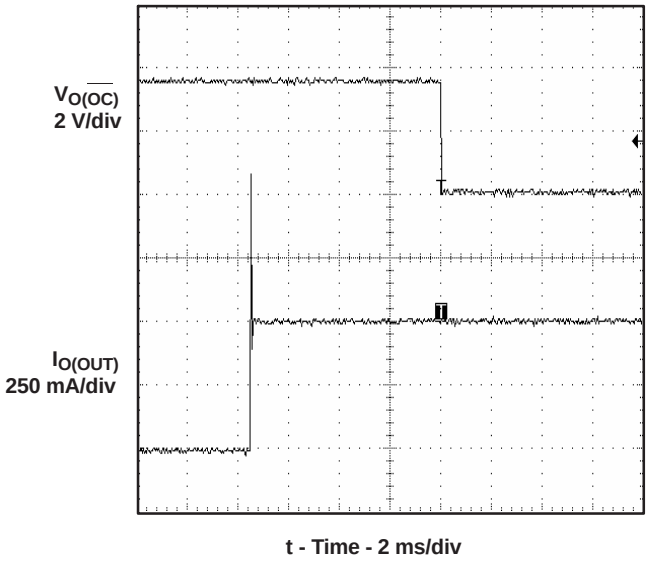

Figure 9. 3-Ω Load Connected to Enabled Device

TYPICAL CHARACTERISTICS

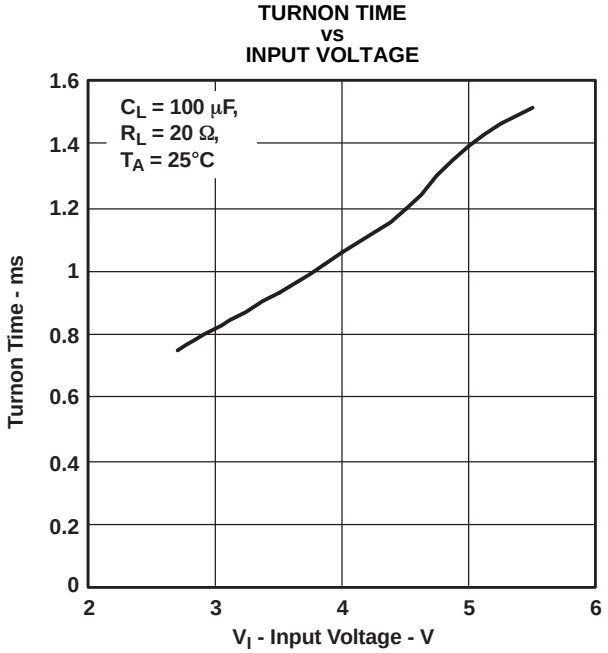

Figure 10.

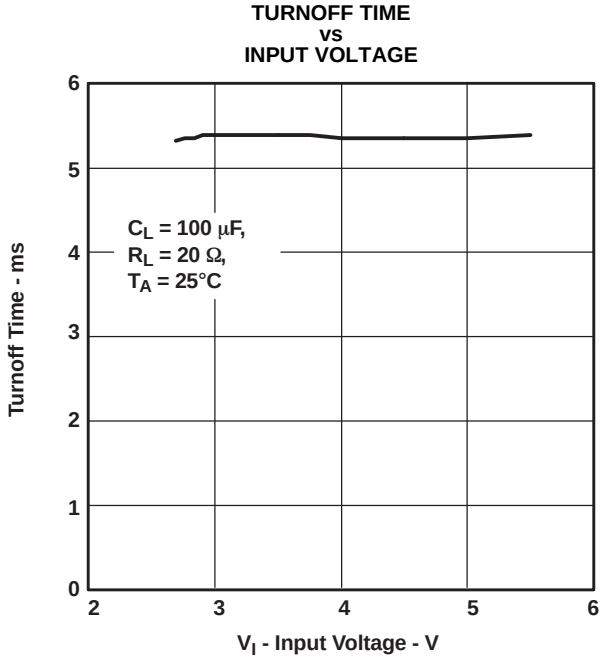

Figure 11.

Copyright © 2004–2007, Texas Instruments Incorporated

TYPICAL CHARACTERISTICS (continued)

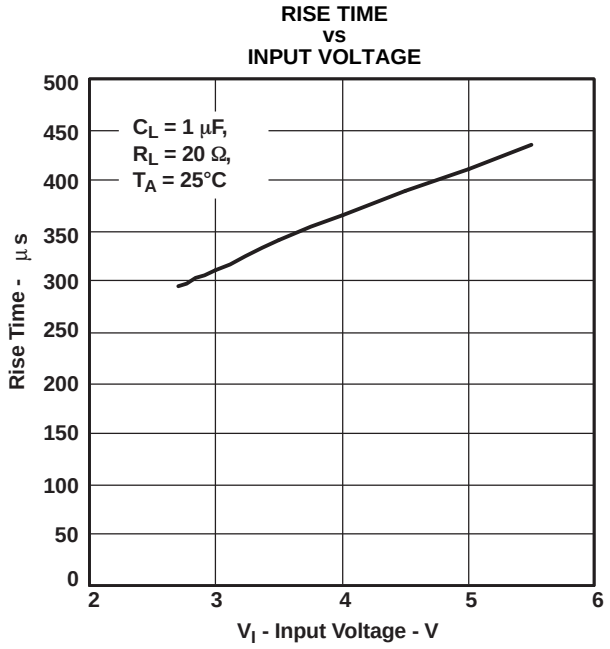

Figure 12.

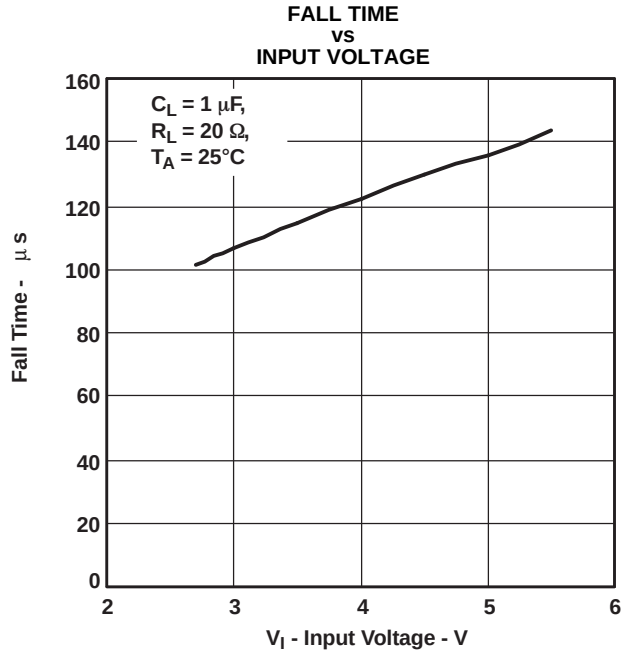

Figure 13.

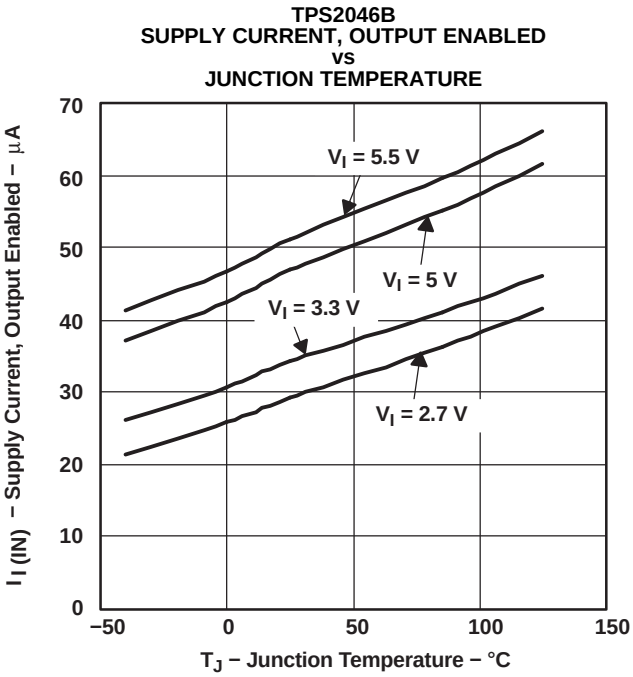

Figure 14.

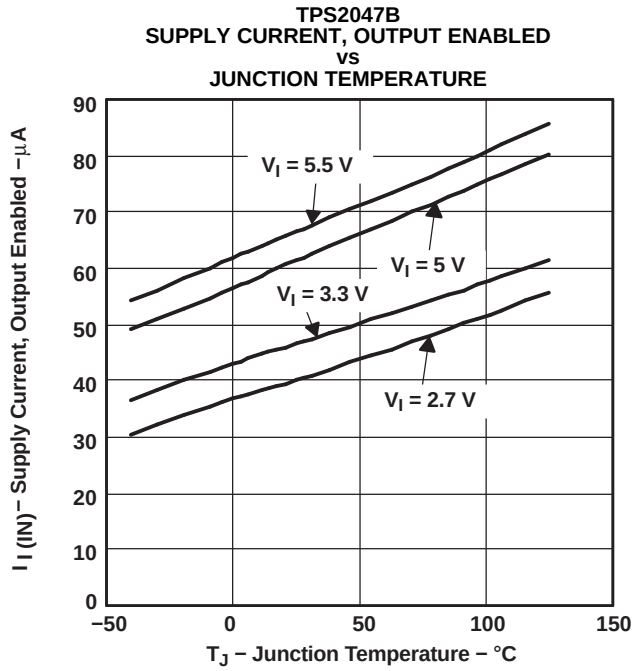

Figure 15.

TYPICAL CHARACTERISTICS (continued)

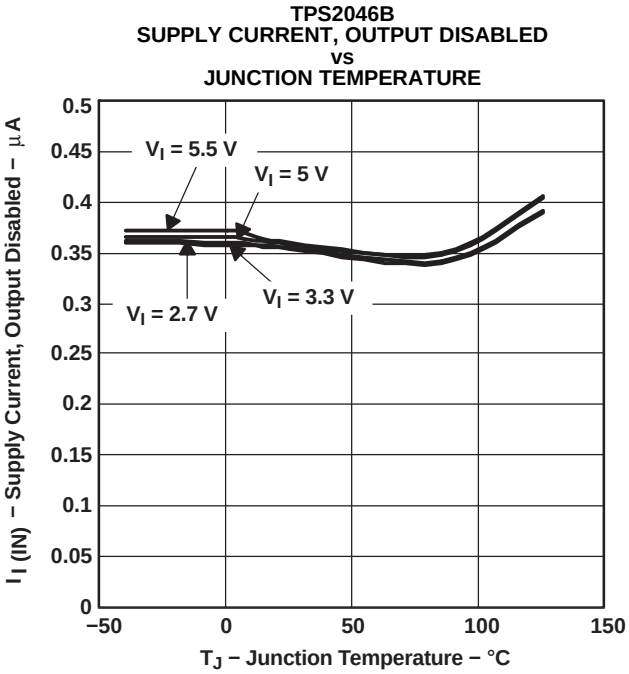

Figure 16.

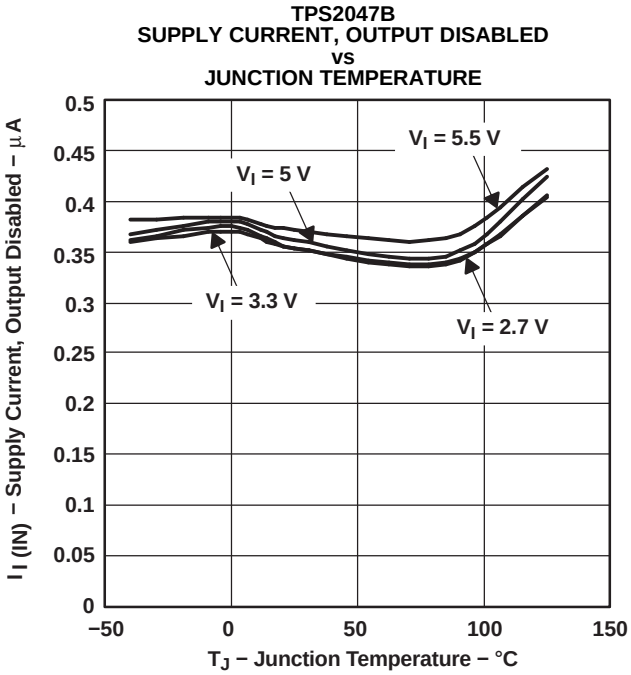

Figure 17.

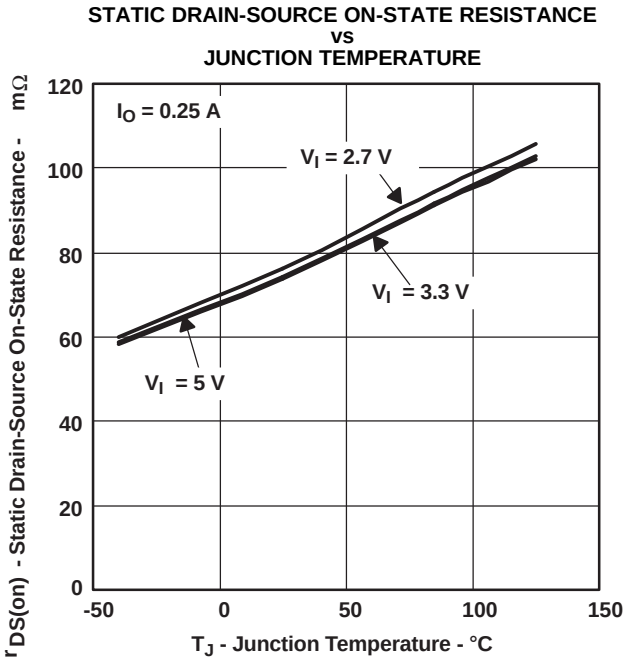

Figure 18.

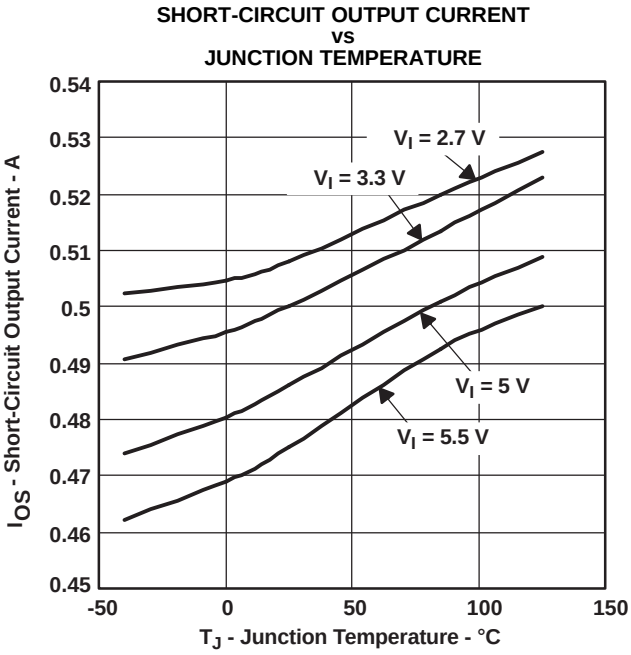

Figure 19.

Copyright © 2004–2007, Texas Instruments Incorporated

TYPICAL CHARACTERISTICS (continued)

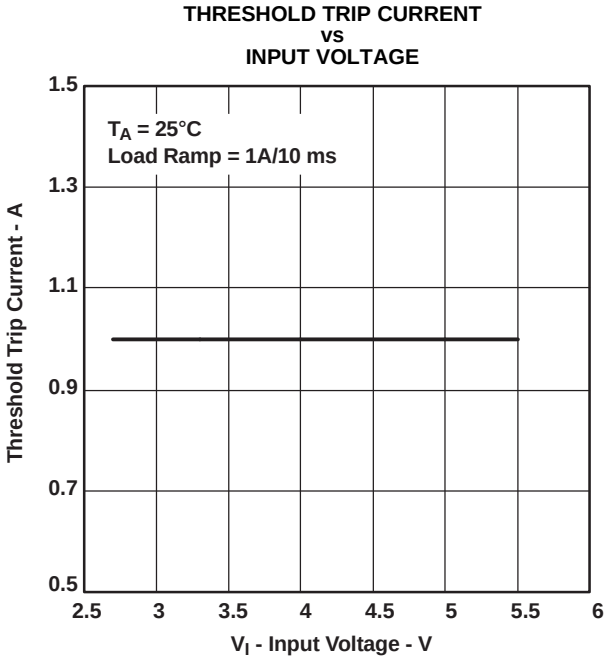

Figure 20.

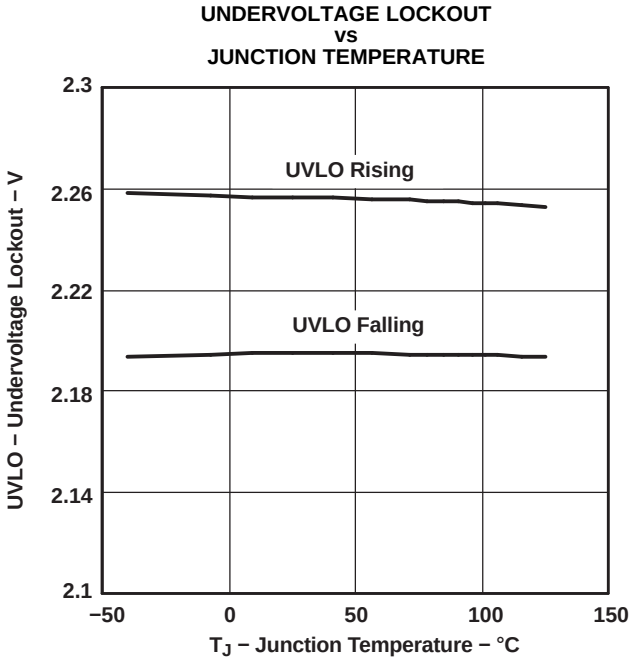

Figure 21.

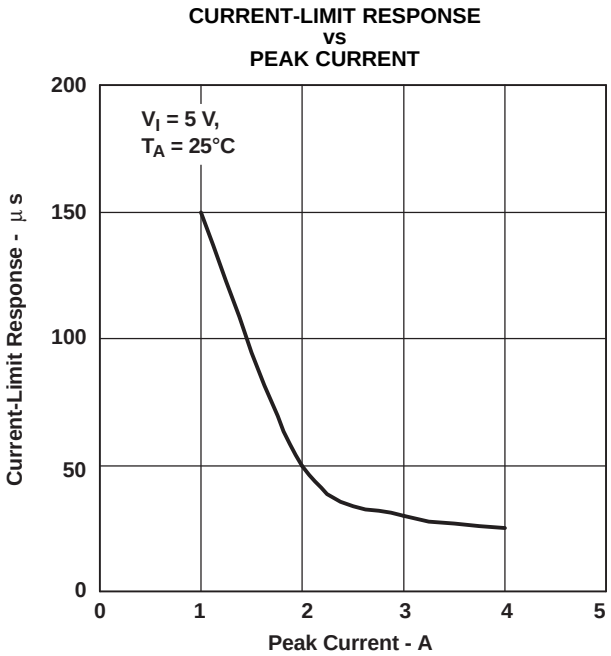

Figure 22.

APPLICATION INFORMATION

POWER-SUPPLY CONSIDERATIONS

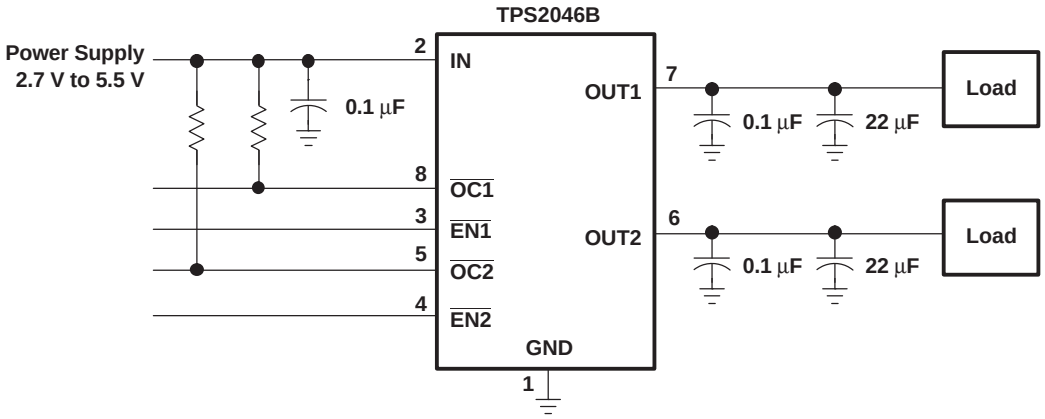

Figure 23. Typical Application (Example, TPS2046B)

A 0.01-µF to 0.1-µF ceramic bypass capacitor between IN and GND, close to the device, is recommended. Placing a high-value electrolytic capacitor on the output pin(s) is recommended when the output load is heavy. This precaution reduces power-supply transients that may cause ringing on the input. Additionally, bypassing the output with a 0.01-µF to 0.1-µF ceramic capacitor improves the immunity of the device to short-circuit transients.

OVERCURRENT

A sense FET is employed to check for overcurrent conditions. Unlike current-sense resistors, sense FETs do not increase the series resistance of the current path. When an overcurrent condition is detected, the device maintains a constant output current and reduces the output voltage accordingly. Complete shutdown occurs only if the fault is present long enough to activate thermal limiting.

Three possible overload conditions can occur. In the first condition, the output has been shorted before the device is enabled or before $V_{I(IN)}$ has been applied (see Figure 6). The TPS204xB/TPS2055B senses the short, and immediately switches into a constant-current output.

In the second condition, a short or an overload occurs while the device is enabled. At the instant the overload occurs, high currents may flow for a short period of time before the current-limit circuit can react. After the current-limit circuit has tripped (reached the overcurrent trip threshold), the device switches into constant-current mode.

In the third condition, the load has been gradually increased beyond the recommended operating current. The current is permitted to rise until the current-limit threshold is reached or until the thermal limit of the device is exceeded. The TPS204xB/TPS2055B is capable of delivering current up to the current-limit threshold without damaging the device. Once the threshold has been reached, the device switches into its constant-current mode.

$\overline{\text{OC}}$ RESPONSE

The $\overline{\text{OC}}$x open-drain output is asserted (active low) when an overcurrent or overtemperature shutdown condition is encountered after a 10-ms deglitch timeout. The output remains asserted until the overcurrent or overtemperature condition is removed. Connecting a heavy capacitive load to an enabled device can cause a momentary overcurrent condition; however, no false reporting on $\overline{\text{OC}}$x occurs due to the 10-ms deglitch circuit. The TPS204xB/TPS2055B is designed to eliminate false overcurrent reporting. The internal overcurrent deglitch eliminates the need for external components to remove unwanted pulses. $\overline{\text{OC}}$x is not deglitched when the switch is turned off due to an overtemperature shutdown.

Copyright © 2004–2007, Texas Instruments Incorporated

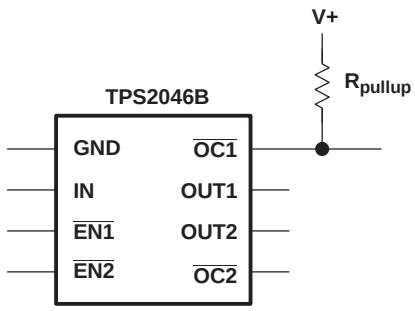

Figure 24. Typical Circuit for the $\overline{OC}$ Pin (Example, TPS2046B)

POWER DISSIPATION AND JUNCTION TEMPERATURE

The low on-resistance on the N-channel MOSFET allows the small surface-mount packages to pass large currents. The thermal resistances of these packages are high compared to those of power packages; it is good design practice to check power dissipation and junction temperature. Begin by determining the $r_{DS(on)}$ of the N-channel MOSFET relative to the input voltage and operating temperature. As an initial estimate, use the highest operating ambient temperature of interest and read $r_{DS(on)}$ from Figure 18. Using this value, the power dissipation per switch can be calculated by:

- $P_D = r_{DS(on)} \times I^2$

Multiply this number by the number of switches being used. This step renders the total power dissipation from the N-channel MOSFETs.

Finally, calculate the junction temperature:

- $T_J = P_D \times R_{\theta JA} + T_A$

Where:

- T_A= Ambient temperature °C
- $R_{\theta JA}$ = Thermal resistance
- P_D = Total power dissipation based on number of switches being used.

Compare the calculated junction temperature with the initial estimate. If they do not agree within a few degrees, repeat the calculation, using the calculated value as the new estimate. Two or three iterations are generally sufficient to get a reasonable answer.

THERMAL PROTECTION

Thermal protection prevents damage to the IC when heavy-overload or short-circuit faults are present for extended periods of time. The TPS204xB/TPS2055B implements a thermal sensing to monitor the operating junction temperature of the power distribution switch. In an overcurrent or short-circuit condition, the junction temperature rises due to excessive power dissipation. Once the die temperature rises to approximately 140°C due to overcurrent conditions, the internal thermal sense circuitry turns the power switch off, thus preventing the power switch from damage. Hysteresis is built into the thermal sense circuit, and after the device has cooled approximately 10°C, the switch turns back on. The switch continues to cycle in this manner until the load fault or input power is removed. The $\overline{OCx}$ open-drain output is asserted (active low) when an overtemperature shutdown or overcurrent occurs.

UNDERVOLTAGE LOCKOUT (UVLO)

An undervoltage lockout ensures that the power switch is in the off state at power up. Whenever the input voltage falls below approximately 2 V, the power switch is quickly turned off. This facilitates the design of hot-insertion systems where it is not possible to turn off the power switch before input power is removed. The UVLO also keeps the switch from being turned on until the power supply has reached at least 2 V, even if the switch is enabled. On reinsertion, the power switch is turned on, with a controlled rise time to reduce EMI and voltage overshoots.

Copyright © 2004–2007, Texas Instruments Incorporated

UNIVERSAL SERIAL BUS (USB) APPLICATIONS

The universal serial bus (USB) interface is a 12-Mb/s, or 1.5-Mb/s, multiplexed serial bus designed for low-to-medium bandwidth PC peripherals (e.g., keyboards, printers, scanners, and mice). The four-wire USB interface is conceived for dynamic attach-detach (hot plug-unplug) of peripherals. Two lines are provided for differential data, and two lines are provided for 5-V power distribution.

USB data is a 3.3-V level signal, but power is distributed at 5 V to allow for voltage drops in cases where power is distributed through more than one hub across long cables. Each function must provide its own regulated 3.3 V from the 5-V input or its own internal power supply.

The USB specification defines the following five classes of devices, each differentiated by power-consumption requirements:

- Hosts/self-powered hubs (SPH)
- Bus-powered hubs (BPH)
- Low-power, bus-powered functions
- High-power, bus-powered functions
- Self-powered functions

Self-powered and bus-powered hubs distribute data and power to downstream functions. The TPS204xB/TPS2055B can provide-power distribution solutions to many of these classes of devices.

HOST/SELF-POWERED AND BUS-POWERED HUBS

Hosts and self-powered hubs have a local power supply that powers the embedded functions and the downstream ports. This power supply must provide from 5.25 V to 4.75 V to the board side of the downstream connection under full-load and no-load conditions. Hosts and SPHs are required to have current-limit protection and must report overcurrent conditions to the USB controller. Typical SPHs are desktop PCs, monitors, printers, and stand-alone hubs.

Bus-powered hubs obtain all power from upstream ports and often contain an embedded function. The hubs are required to power up with less than one unit load. The BPH usually has one embedded function, and power is always available to the controller of the hub. If the embedded function and hub require more than 100 mA on power up, the power to the embedded function may need to be kept off until enumeration is completed. This can be accomplished by removing power or by shutting off the clock to the embedded function. Power switching the embedded function is not necessary if the aggregate power draw for the function and controller is less than one unit load. The total current drawn by the bus-powered device is the sum of the current to the controller, the embedded function, and the downstream ports, and it is limited to 500 mA from an upstream port.

LOW-POWER BUS-POWERED AND HIGH-POWER BUS-POWERED FUNCTIONS

Both low-power and high-power bus-powered functions obtain all power from upstream ports; low-power functions always draw less than 100 mA; high-power functions must draw less than 100 mA at power up and can draw up to 500 mA after enumeration. If the load of the function is more than the parallel combination of 44 Ω and 10 µF at power up, the device must implement inrush current limiting (see Figure 25).

Copyright © 2004–2007, Texas Instruments Incorporated

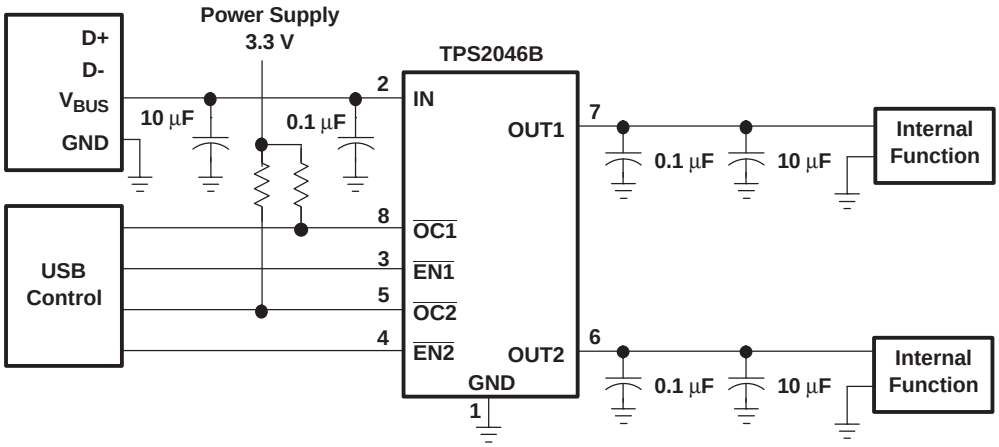

Figure 25. High-Power Bus-Powered Function (Example, TPS2046B)

USB POWER-DISTRIBUTION REQUIREMENTS

USB can be implemented in several ways, and, regardless of the type of USB device being developed, several power-distribution features must be implemented.

- Hosts/self-powered hubs must:
  - Current-limit downstream ports
  - Report overcurrent conditions on USB V_{BUS}
- Bus-powered hubs must:
  - Enable/disable power to downstream ports
  - Power up at <100 mA
  - Limit inrush current (<44 Ω and 10 µF)
- Functions must:
  - Limit inrush currents
  - Power up at <100 mA

The feature set of the TPS204xB/TPS2055B allows them to meet each of these requirements. The integrated current-limiting and overcurrent reporting is required by hosts and self-powered hubs. The logic-level enable and controlled rise times meet the need of both input and output ports on bus-powered hubs, as well as the input ports for bus-powered functions (see Figure 26 through Figure 27).

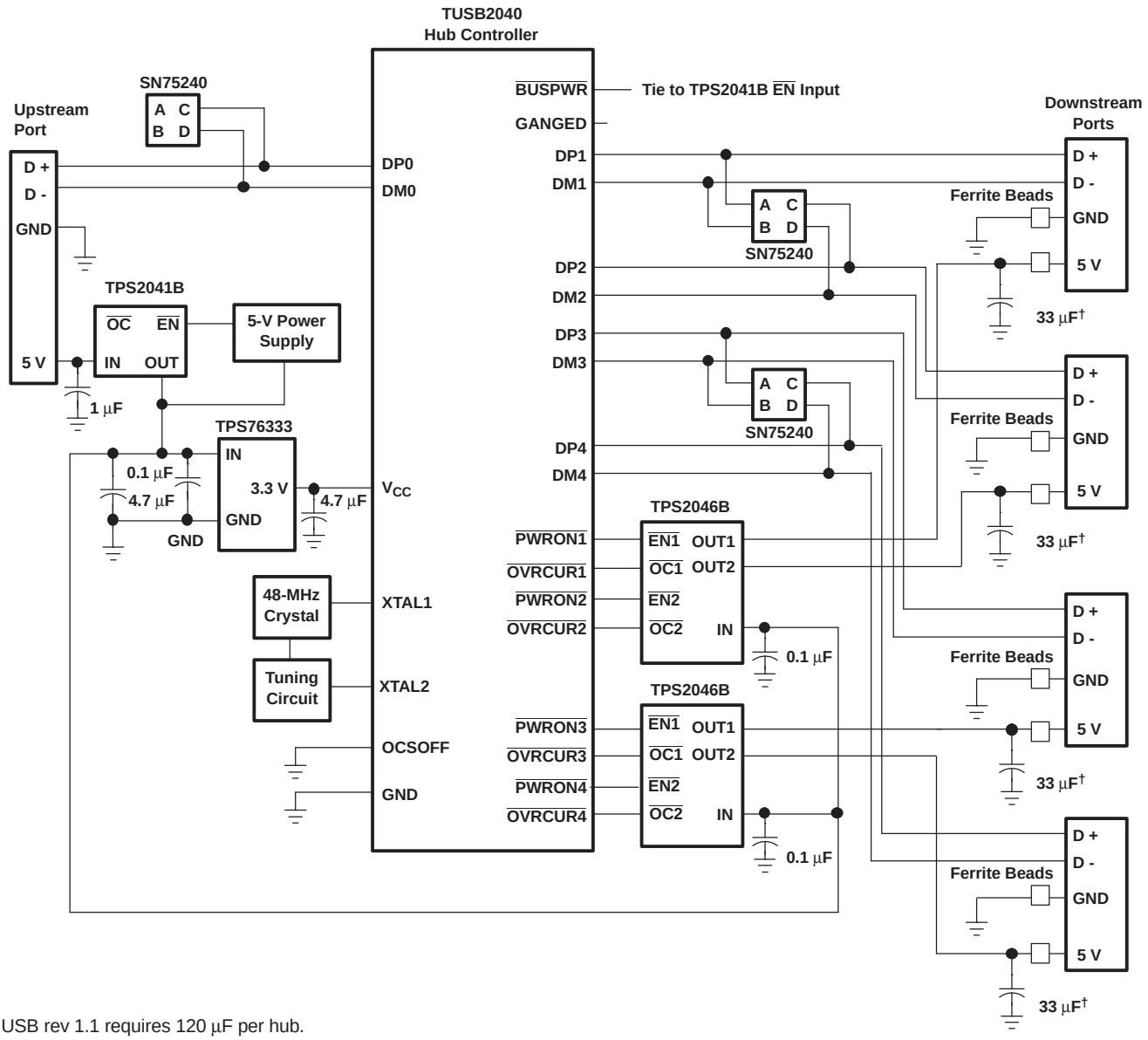

† USB rev 1.1 requires 120 µF per hub.

Figure 26. Hybrid Self/Bus-Powered Hub Implementation, TPS2046B

Copyright © 2004–2007, Texas Instruments Incorporated

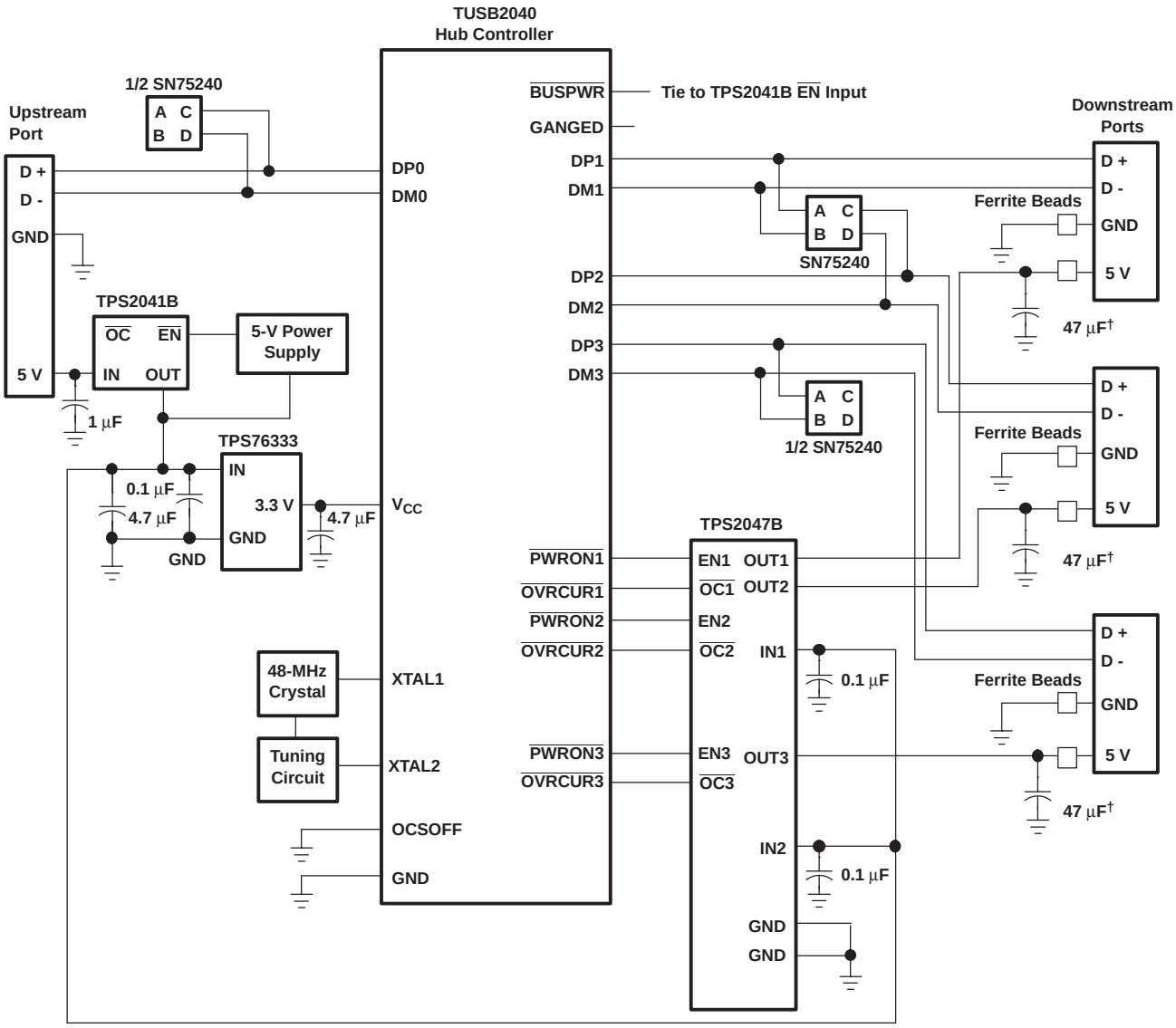

† USB rev 1.1 requires 120 µF per hub.

Figure 27. Hybrid Self / Bus-Powered Hub Implementation, TPS2047B

GENERIC HOT-PLUG APPLICATIONS

In many applications it may be necessary to remove modules or pc boards while the main unit is still operating. These are considered hot-plug applications. Such implementations require the control of current surges seen by the main power supply and the card being inserted. The most effective way to control these surges is to limit and slowly ramp the current and voltage being applied to the card, similar to the way in which a power supply normally turns on. Due to the controlled rise times and fall times of the TPS204xB/TPS2055B, these devices can be used to provide a softer start-up to devices being hot-plugged into a powered system. The UVLO feature of the TPS204xB/TPS2055B also ensures that the switch is off after the card has been removed, and that the switch is off during the next insertion. The UVLO feature insures a soft start with a controlled rise time for every insertion of the card or module.

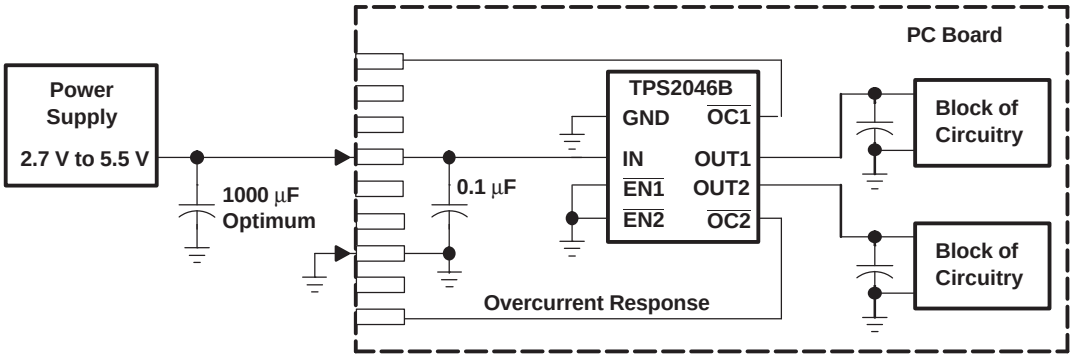

Figure 28. Typical Hot-Plug Implementation (Example, TPS2046B)

By placing the TPS204xB/TPS2055B between the V_{CC} input and the rest of the circuitry, the input power reaches these devices first after insertion. The typical rise time of the switch is approximately 1 ms, providing a slow voltage ramp at the output of the device. This implementation controls system surge currents and provides a hot-plugging mechanism for any device.

DETAILED DESCRIPTION

POWER SWITCH

The power switch is an N-channel MOSFET with a low on-state resistance. Configured as a high-side switch, the power switch prevents current flow from OUT to IN and IN to OUT when disabled. The power switch supplies a minimum current of 250 mA.

CHARGE PUMP

An internal charge pump supplies power to the driver circuit and provides the necessary voltage to pull the gate of the MOSFET above the source. The charge pump operates from input voltages as low as 2.7 V and requires little supply current.

DRIVER

The driver controls the gate voltage of the power switch. To limit large current surges and reduce the associated electromagnetic interference (EMI) produced, the driver incorporates circuitry that controls the rise times and fall times of the output voltage.

ENABLE ($\overline{\text{ENx}}$)

The logic enable pin disables the power switch and the bias for the charge pump, driver, and other circuitry to reduce the supply current. The supply current is reduced to less than 1 µA or 2 µA when a logic high is present on $\overline{\text{EN}}$. A logic zero input on $\overline{\text{EN}}$ restores bias to the drive and control circuits and turns the switch on. The enable input is compatible with both TTL and CMOS logic levels.

Copyright © 2004–2007, Texas Instruments Incorporated

ENABLE (ENx)

The logic enable disables the power switch and the bias for the charge pump, driver, and other circuitry to reduce the supply current. The supply current is reduced to less than 1 µA or 2 µA when a logic low is present on ENx. A logic high input on ENx restores bias to the drive and control circuits and turns the switch on. The enable input is compatible with both TTL and CMOS logic levels.

OVERCURRENT ($\overline{\text{OCx}}$)

The $\overline{\text{OCx}}$ open-drain output is asserted (active low) when an overcurrent or overtemperature condition is encountered. The output remains asserted until the overcurrent or overtemperature condition is removed. A 10-ms deglitch circuit prevents the $\overline{\text{OCx}}$ signal from oscillation or false triggering. If an overtemperature shutdown occurs, the $\overline{\text{OCx}}$ is asserted instantaneously.

CURRENT SENSE

A sense FET monitors the current supplied to the load. The sense FET measures current more efficiently than conventional resistance methods. When an overload or short circuit is encountered, the current-sense circuitry sends a control signal to the driver. The driver in turn reduces the gate voltage and drives the power FET into its saturation region, which switches the output into a constant-current mode and holds the current constant while varying the voltage on the load.

THERMAL SENSE

The TPS204xB/TPS2055B implements a thermal sensing to monitor the operating temperature of the power distribution switch. In an overcurrent or short-circuit condition, the junction temperature rises. When the die temperature rises to approximately 140°C due to overcurrent conditions, the internal thermal sense circuitry turns off the switch, thus preventing the device from damage. Hysteresis is built into the thermal sense, and after the device has cooled approximately 10 degrees, the switch turns back on. The switch continues to cycle off and on until the fault is removed. The open-drain false reporting output ($\overline{\text{OCx}}$) is asserted (active low) when an overtemperature shutdown or overcurrent occurs.

UNDERVOLTAGE LOCKOUT

A voltage sense circuit monitors the input voltage. When the input voltage is below approximately 2 V, a control signal turns off the power switch.

Copyright © 2004–2007, Texas Instruments Incorporated

PACKAGING INFORMATION

Orderable Device	Status (1)	Package Type	Package Drawing	Pins	Package Qty	Eco Plan (2)	Lead finish/ Ball material (6)	MSL Peak Temp (3)	Op Temp (°C)	Device Marking (4/5)	Samples
TPS2046BD	ACTIVE	SOIC	D	8	75	RoHS & Green	NIPDAU	Level-1-260C-UNLIM	-40 to 125	2046B	Samples
TPS2046BDR	ACTIVE	SOIC	D	8	2500	RoHS & Green	NIPDAU	Level-1-260C-UNLIM	-40 to 125	2046B	Samples
TPS2047BD	ACTIVE	SOIC	D	16	40	RoHS & Green	NIPDAU	Level-1-260C-UNLIM	-40 to 125	2047B	Samples

(1) The marketing status values are defined as follows:
ACTIVE: Product device recommended for new designs.
LIFEBUY: TI has announced that the device will be discontinued, and a lifetime-buy period is in effect.
NRND: Not recommended for new designs. Device is in production to support existing customers, but TI does not recommend using this part in a new design.
PREVIEW: Device has been announced but is not in production. Samples may or may not be available.
OBSOLETE: TI has discontinued the production of the device.

(2) **RoHS:** TI defines "RoHS" to mean semiconductor products that are compliant with the current EU RoHS requirements for all 10 RoHS substances, including the requirement that RoHS substance do not exceed 0.1% by weight in homogeneous materials. Where designed to be soldered at high temperatures, "RoHS" products are suitable for use in specified lead-free processes. TI may reference these types of products as "Pb-Free".
RoHS Exempt: TI defines "RoHS Exempt" to mean products that contain lead but are compliant with EU RoHS pursuant to a specific EU RoHS exemption.
Green: TI defines "Green" to mean the content of Chlorine (Cl) and Bromine (Br) based flame retardants meet JS709B low halogen requirements of <=1000ppm threshold. Antimony trioxide based flame retardants must also meet the <=1000ppm threshold requirement.

(3) MSL, Peak Temp. - The Moisture Sensitivity Level rating according to the JEDEC industry standard classifications, and peak solder temperature.

(4) There may be additional marking, which relates to the logo, the lot trace code information, or the environmental category on the device.

(5) Multiple Device Markings will be inside parentheses. Only one Device Marking contained in parentheses and separated by a "~" will appear on a device. If a line is indented then it is a continuation of the previous line and the two combined represent the entire Device Marking for that device.

(6) Lead finish/Ball material - Orderable Devices may have multiple material finish options. Finish options are separated by a vertical ruled line. Lead finish/Ball material values may wrap to two lines if the finish value exceeds the maximum column width.

Important Information and Disclaimer: The information provided on this page represents TI's knowledge and belief as of the date that it is provided. TI bases its knowledge and belief on information provided by third parties, and makes no representation or warranty as to the accuracy of such information. Efforts are underway to better integrate information from third parties. TI has taken and continues to take reasonable steps to provide representative and accurate information but may not have conducted destructive testing or chemical analysis on incoming materials and chemicals. TI and TI suppliers consider certain information to be proprietary, and thus CAS numbers and other limited information may not be available for release.

In no event shall TI's liability arising out of such information exceed the total purchase price of the TI part(s) at issue in this document sold by TI to Customer on an annual basis.

TAPE AND REEL INFORMATION

REEL DIMENSIONS

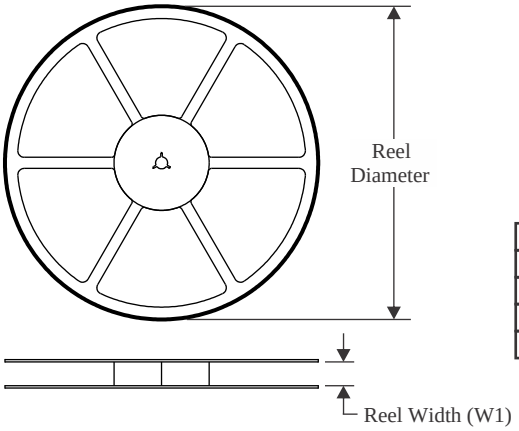

TAPE DIMENSIONS

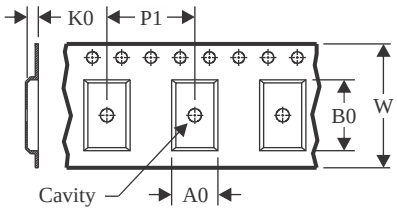

A0	Dimension designed to accommodate the component width
B0	Dimension designed to accommodate the component length
K0	Dimension designed to accommodate the component thickness
W	Overall width of the carrier tape
P1	Pitch between successive cavity centers

QUADRANT ASSIGNMENTS FOR PIN 1 ORIENTATION IN TAPE

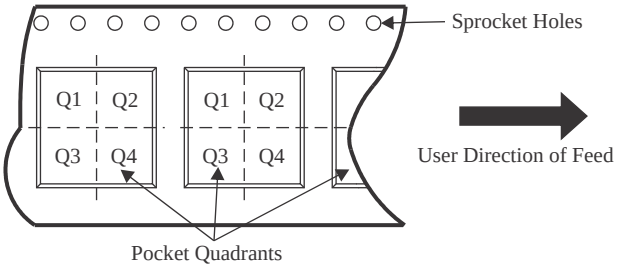

*All dimensions are nominal

Device	Package Type	Package Drawing	Pins	SPQ	Reel Diameter (mm)	Reel Width W1 (mm)	A0 (mm)	B0 (mm)	K0 (mm)	P1 (mm)	W (mm)	Pin1 Quadrant
TPS2046BDR	SOIC	D	8	2500	330.0	12.4	6.4	5.2	2.1	8.0	12.0	Q1

TAPE AND REEL BOX DIMENSIONS

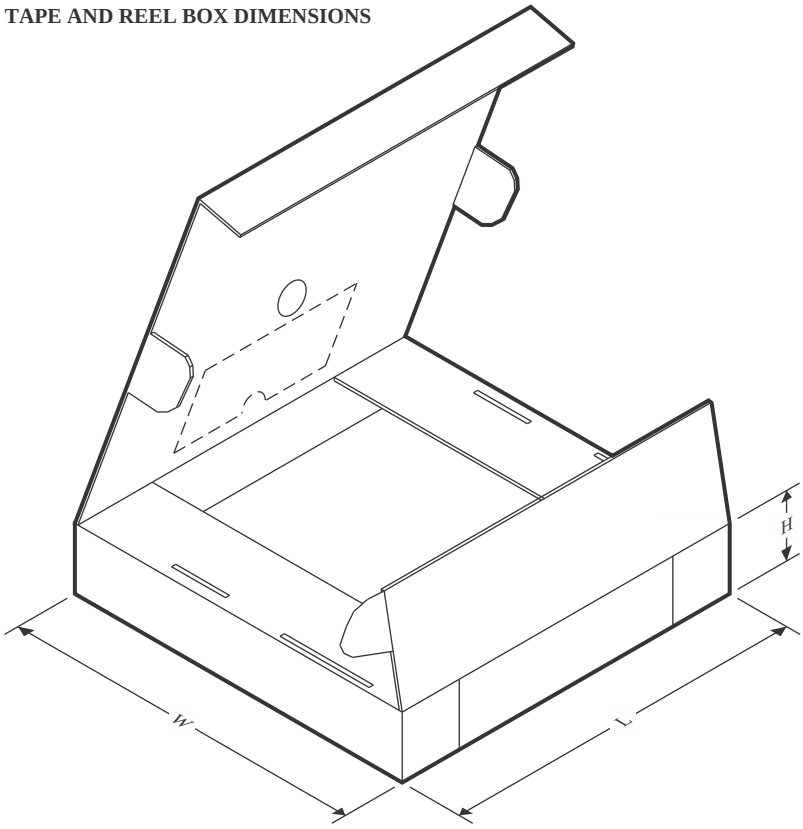

*All dimensions are nominal

Device	Package Type	Package Drawing	Pins	SPQ	Length (mm)	Width (mm)	Height (mm)
TPS2046BDR	SOIC	D	8	2500	340.5	338.1	20.6

TUBE

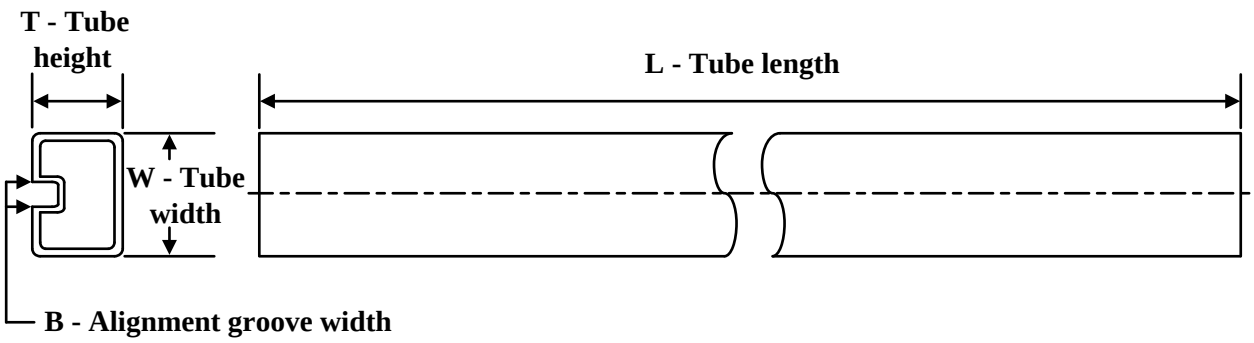

*All dimensions are nominal

Device	Package Name	Package Type	Pins	SPQ	L (mm)	W (mm)	T (µm)	B (mm)
TPS2046BD	D	SOIC	8	75	507	8	3940	4.32
TPS2047BD	D	SOIC	16	40	507	8	3940	4.32

D (R–PDSO–G16) PLASTIC SMALL OUTLINE

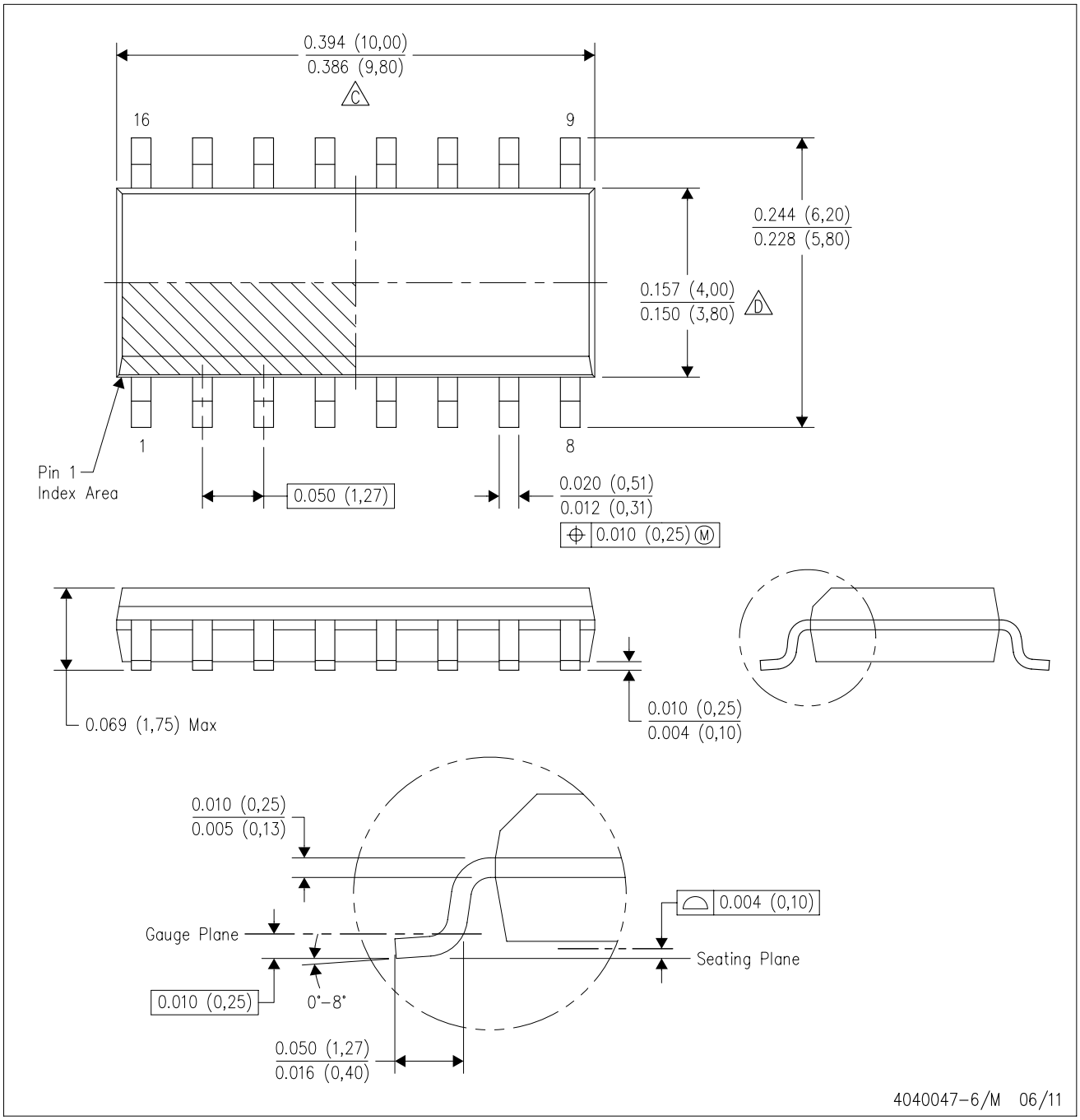

NOTES:
A. All linear dimensions are in inches (millimeters).
B. This drawing is subject to change without notice.
C. Body length does not include mold flash, protrusions, or gate burrs. Mold flash, protrusions, or gate burrs shall not exceed 0.006 (0,15) each side.
D. Body width does not include interlead flash. Interlead flash shall not exceed 0.017 (0,43) each side.
E. Reference JEDEC MS–012 variation AC.

D (R–PDSO–G16) PLASTIC SMALL OUTLINE

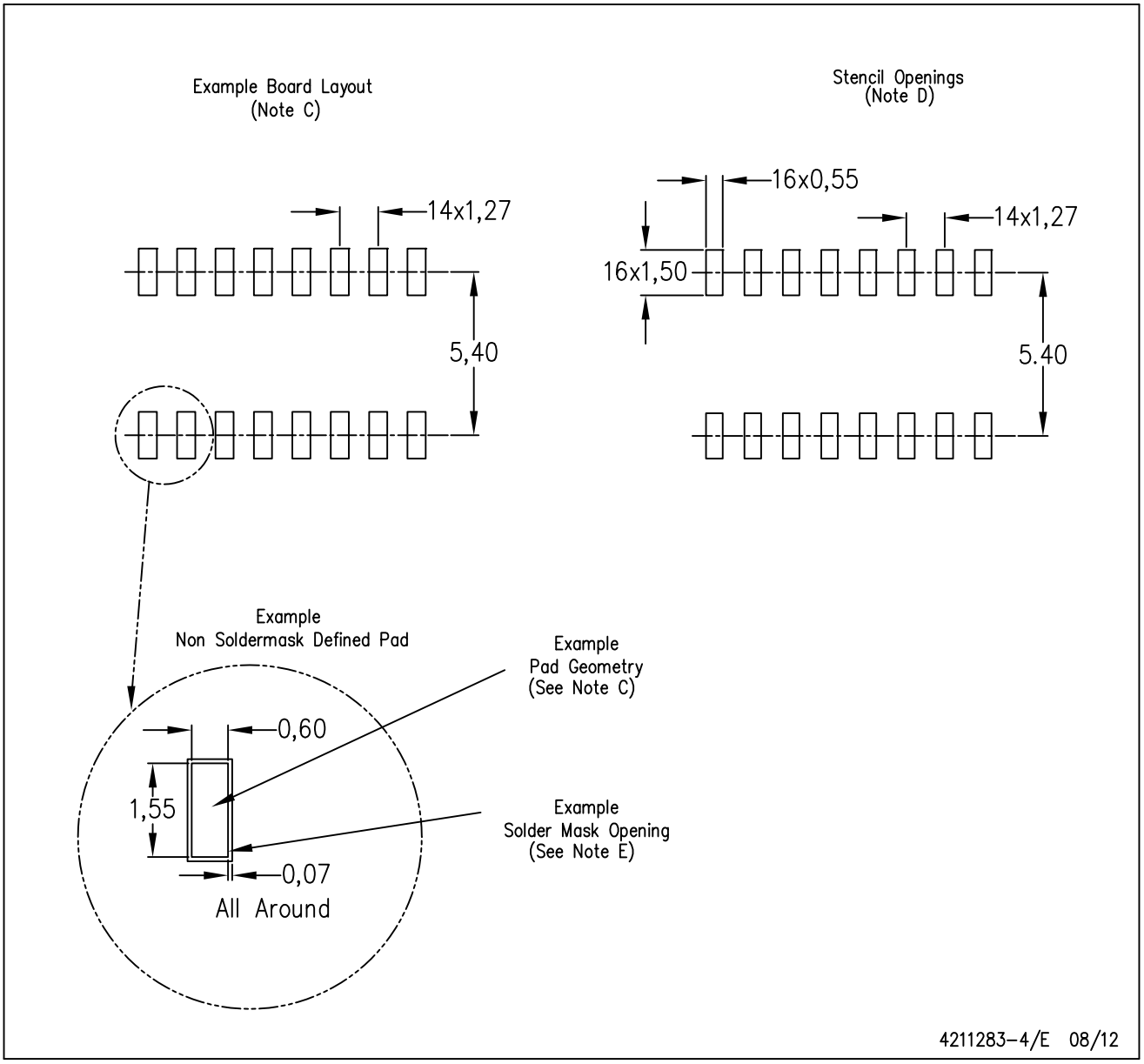

NOTES:
A. All linear dimensions are in millimeters.
B. This drawing is subject to change without notice.
C. Publication IPC–7351 is recommended for alternate designs.
D. Laser cutting apertures with trapezoidal walls and also rounding corners will offer better paste release. Customers should contact their board assembly site for stencil design recommendations. Refer to IPC–7525 for other stencil recommendations.
E. Customers should contact their board fabrication site for solder mask tolerances between and around signal pads.

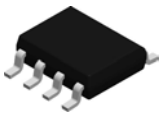

PACKAGE OUTLINE

D0008A

SOIC - 1.75 mm max height

SMALL OUTLINE INTEGRATED CIRCUIT

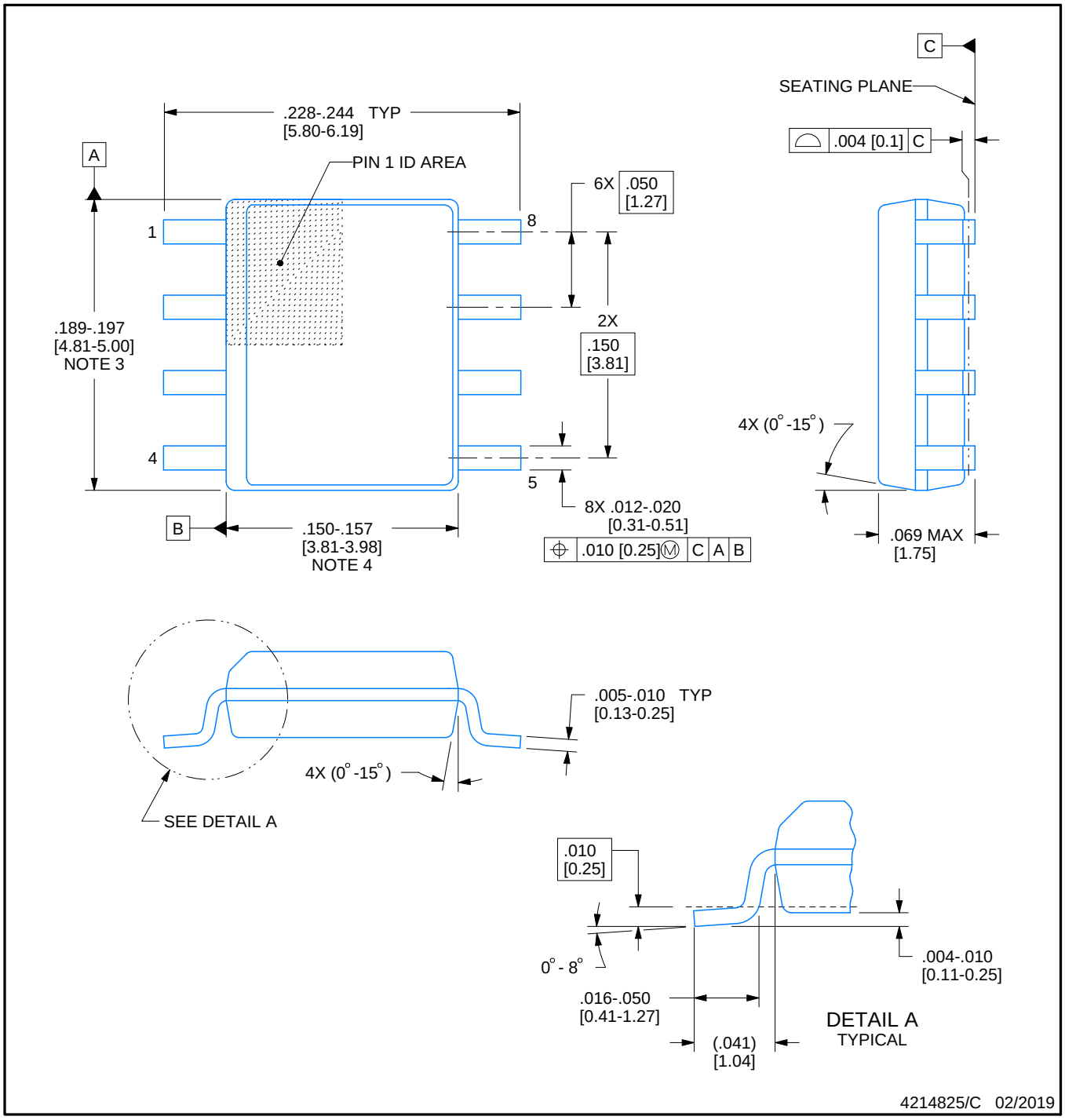

NOTES:

1. Linear dimensions are in inches [millimeters]. Dimensions in parenthesis are for reference only. Controlling dimensions are in inches. Dimensioning and tolerancing per ASME Y14.5M.
2. This drawing is subject to change without notice.
3. This dimension does not include mold flash, protrusions, or gate burrs. Mold flash, protrusions, or gate burrs shall not exceed .006 [0.15] per side.
4. This dimension does not include interlead flash.
5. Reference JEDEC registration MS-012, variation AA.

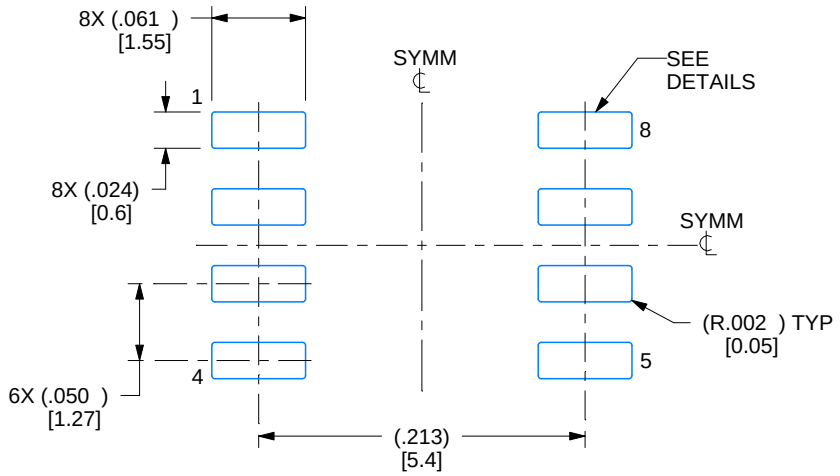

LAND PATTERN EXAMPLE
EXPOSED METAL SHOWN
SCALE:8X

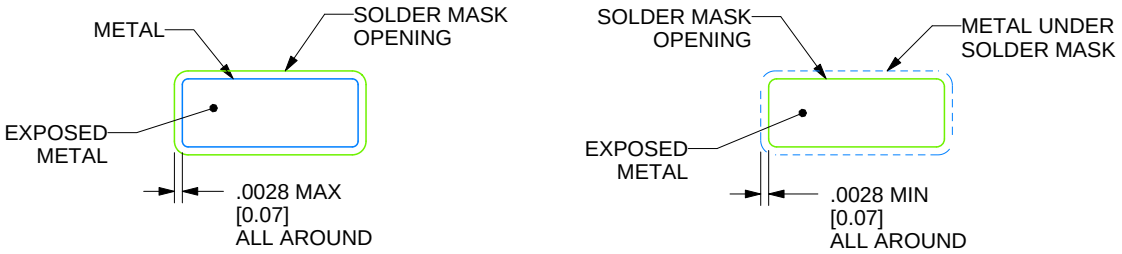

SOLDER MASK DETAILS

4214825/C 02/2019

NOTES: (continued)

6. Publication IPC-7351 may have alternate designs.
7. Solder mask tolerances between and around signal pads can vary based on board fabrication site.

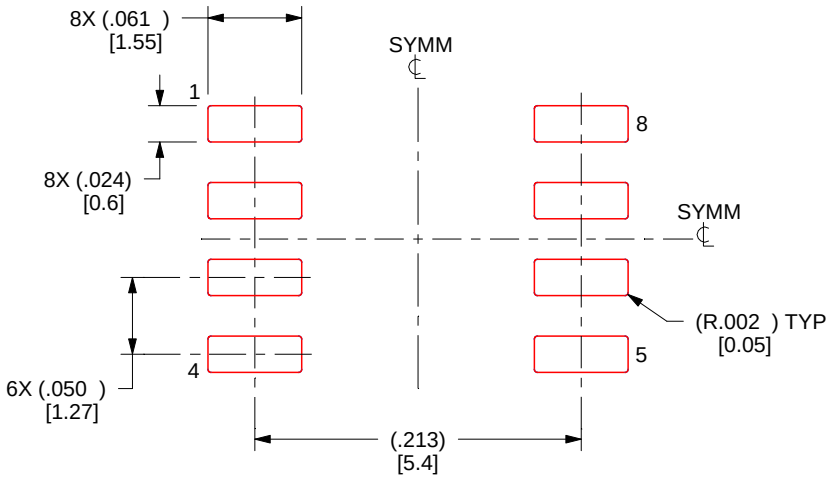

SOLDER PASTE EXAMPLE
BASED ON .005 INCH [0.125 MM] THICK STENCIL
SCALE:8X

4214825/C 02/2019

NOTES: (continued)

8. Laser cutting apertures with trapezoidal walls and rounded corners may offer better paste release. IPC-7525 may have alternate design recommendations.
9. Board assembly site may have different recommendations for stencil design.

IMPORTANT NOTICE AND DISCLAIMER

TI PROVIDES TECHNICAL AND RELIABILITY DATA (INCLUDING DATA SHEETS), DESIGN RESOURCES (INCLUDING REFERENCE DESIGNS), APPLICATION OR OTHER DESIGN ADVICE, WEB TOOLS, SAFETY INFORMATION, AND OTHER RESOURCES “AS IS” AND WITH ALL FAULTS, AND DISCLAIMS ALL WARRANTIES, EXPRESS AND IMPLIED, INCLUDING WITHOUT LIMITATION ANY IMPLIED WARRANTIES OF MERCHANTABILITY, FITNESS FOR A PARTICULAR PURPOSE OR NON-INFRINGEMENT OF THIRD PARTY INTELLECTUAL PROPERTY RIGHTS.

These resources are intended for skilled developers designing with TI products. You are solely responsible for (1) selecting the appropriate TI products for your application, (2) designing, validating and testing your application, and (3) ensuring your application meets applicable standards, and any other safety, security, regulatory or other requirements.

These resources are subject to change without notice. TI grants you permission to use these resources only for development of an application that uses the TI products described in the resource. Other reproduction and display of these resources is prohibited. No license is granted to any other TI intellectual property right or to any third party intellectual property right. TI disclaims responsibility for, and you will fully indemnify TI and its representatives against, any claims, damages, costs, losses, and liabilities arising out of your use of these resources.

TI’s products are provided subject to TI’s Terms of Sale or other applicable terms available either on ti.com or provided in conjunction with such TI products. TI’s provision of these resources does not expand or otherwise alter TI’s applicable warranties or warranty disclaimers for TI products.

TI objects to and rejects any additional or different terms you may have proposed.

Mailing Address: Texas Instruments, Post Office Box 655303, Dallas, Texas 75265
Copyright © 2023, Texas Instruments Incorporated

Looking for pricing, stock, or lifecycle information?

Click below to explore more details on WIN SOURCE:

- View TPS2046BD on WIN SOURCE
- Texas Instruments Information

Optimize Your Supply Chain with WIN SOURCE Solutions

- Global Sourcing Solution
- Obsolete Management
- Cost Control Management
- Shortage Management
- Alternative Solution
- Excess Inventory Management