THE DATASHEET OF

DAC8554IPWR

www.win-source.net 0086-755-83957316

16-BIT, QUAD-CHANNEL, ULTRA-LOW GLITCH, VOLTAGE OUTPUT DIGITAL-TO-ANALOG CONVERTER

FEATURES

- **Relative Accuracy: 4LSB**
- **Glitch Energy: 0.15nV-s**
- ***Micro*Power Operation: 150µA per channel at 2.7V**
- **Power-On Reset to Zero-Scale**
- **Power Supply: +2.7V to +5.5V**
- **16-Bit Monotonic Over Temperature**
- **Settling Time: 10µs to ±0.003% FSR**
- **Ultra-Low AC Crosstalk: –100dB Typ**
- **Low Power SPI™ Compatible Serial Interface with Schmitt-Triggered Inputs: Up to 50MHz**
- **On-Chip Output Buffer Amplifier with Rail-to-Rail Operation**
- **Double Buffered Input Architecture**
- **Simultaneous or Sequential Output Update and Power-Down**
- **16-Channel Broadcast Capability**
- **1.8V to 5.5V Logic Compatibility**
- **Available in a TSSOP-16 Package**

APPLICATIONS

- **Portable Instrumentation**
- **Closed-Loop Servo-Control**
- **Process Control**
- **Data Acquisition Systems**
- **Programmable Attenuation**
- **PC Peripherals**

DESCRIPTION

The DAC8554 is a 16-bit, quad-channel, voltage output, digital-to-analog converter (DAC), offering low-power operation and a flexible serial host interface. It offers monotonicity, good linearity, and exceptionally low glitch. Each on-chip precision output amplifier allows rail-to-rail output swing to be achieved over the supply range of 2.7V to 5.5V. The device supports a standard 3-wire serial interface capable of operating with input data clock frequencies up to 50MHz for IOV_{DD} = 5V.

The DAC8554 requires an external reference voltage to set the output range of each DAC channel. Also incorporated into the device is a power-on reset circuit which ensures that the DAC outputs power up at zero-scale and remain there until a valid write takes place. The DAC8554 provides a per channel power-down feature, accessed over the serial interface, that reduces the current consumption to 175nA per channel at 5V.

The low-power consumption of this device in normal operation makes it ideally suited to portable battery-operated equipment and other low-power applications. The power consumption is 4.25mW at 5V, reducing to 4µW in power-down mode.

The DAC8554 is available in a TSSOP-16 package with a specified operating temperature range of –40°C to +105°C.

FUNCTIONAL BLOCK DIAGRAM

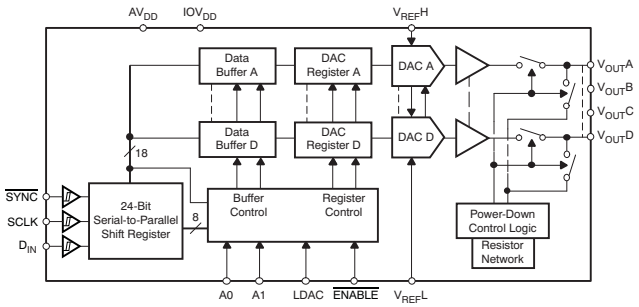

Please be aware that an important notice concerning availability, standard warranty, and use in critical applications of Texas Instruments semiconductor products and disclaimers thereto appears at the end of this data sheet.

SPI, QSPI are trademarks of Motorola, Inc.
Microwire is a trademark of National Semiconductor.
All other trademarks are the property of their respective owners.

PRODUCTION DATA information is current as of publication date. Products conform to specifications per the terms of the Texas Instruments standard warranty. Production processing does not necessarily include testing of all parameters.

Copyright © 2005–2006, Texas Instruments Incorporated

This integrated circuit can be damaged by ESD. Texas Instruments recommends that all integrated circuits be handled with appropriate precautions. Failure to observe proper handling and installation procedures can cause damage.

ESD damage can range from subtle performance degradation to complete device failure. Precision integrated circuits may be more susceptible to damage because very small parametric changes could cause the device not to meet its published specifications.

PACKAGING/ORDERING INFORMATION(1)

PRODUCT	MAXIMUM RELATIVE ACCURACY (LSB)	MAXIMUM DIFFERENTIAL NONLINEARITY (LSB)	PACKAGE-LEAD	PACKAGE DESIGNATOR	SPECIFIED TEMPERATURE RANGE	PACKAGE MARKING	ORDERING NUMBER	TRANSPORT MEDIA, QUANTITY
DAC8554	±12	±1	TSSOP-16	PW	–40°C to +105°C	D8554	DAC8554IPW	Tube, 90
							DAC8554IPWR	Tape and Reel, 2000

(1) For the most current package and ordering information see the Package Option Addendum at the end of this document, or see the TI web site at www.ti.com.

ABSOLUTE MAXIMUM RATINGS(1)

		UNIT
AV_{DD} to GND		–0.3V to 6V
Digital input voltage to GND		–0.3 V to AV_{DD} + 0.3V
$V_{O(A)}$ to $V_{O(D)}$ to GND		–0.3V to AV_{DD} + 0.3V
Operating temperature range		–40°C to +105°C
Storage temperature range		–65°C to +150°C
Junction temperature range (T_J max)		150°C
Power dissipation		$(T_J max – T_A)/\theta_{JA}$
θ_{JA} Thermal impedance		118°C/W
θ_{JC} Thermal impedance		29°C/W
ESD rating	Human body model (HBM)	1500V
	Charged device model (CDM)	1000V

(1) Stresses above those listed under *absolute maximum ratings* may cause permanent damage to the device. Exposure to absolute maximum conditions for extended periods may affect device reliability.

ELECTRICAL CHARACTERISTICS

V_{DD} = 2.7V to 5.5V,– 40°C to +105°C range (unless otherwise noted).

PARAMETER	TEST CONDITIONS	MIN	TYP	MAX	UNIT
STATIC PERFORMANCE(1)					
Resolution		16			Bits
Relative accuracy	Measured by line passing through codes 485 and 64741		±4	±12	LSB
Differential nonlinearity	16-bit monotonic		±0.25	±1	LSB
Zero-scale error	Measured by line passing through codes 485 and 64741		±2	±12	mV
Zero-scale error drift			±5		µV/°C
Full-scale error	Measured by line passing through codes 485 and 64741, (AV_{DD} = 5V, V_{REF} = 4.99V) and (AV_{DD} = 2.7V, V_{REF} = 2.69V)		±0.3	±0.5	% of FSR
Gain error			±0.05	±0.15	% of FSR
Gain temperature coefficient			±1		ppm of FSR/°C
PSRR Power-Supply Rejection Ratio	R_L = 2kΩ, C_L = 200pF		0.75		mV/V
OUTPUT CHARACTERISTICS(2)					
Output voltage range		0		$V_{REF}H$	V
Output voltage settling time	To ±0.003% FSR, 0200h to FD00h, R_L = 2kΩ, 0pF < C_L < 200pF		8	10	µs
	R_L = 2kΩ, C_L = 500pF		12		µs

(1) Linearity calculated using a reduced code range of 485 to 64741; output unloaded.
(2) Ensured by design and characterization; not production tested.

ELECTRICAL CHARACTERISTICS (continued)

V_{DD} = 2.7V to 5.5V,– 40°C to +105°C range (unless otherwise noted).

PARAMETER	TEST CONDITIONS	MIN	TYP	MAX	UNIT
Slew rate			1.8		V/µs
Capacitive load stability	$R_L = \infty$		470		pF
	R_L = 2kΩ		1000		pF
Code change glitch impulse	1LSB change around major carry		0.15		nV-s
Digital feedthrough			0.15		
DC crosstalk	Full-scale swing on adjacent channel. AV_{DD} = 5V, V_{REF} = 4.096V		0.25		LSB
AC crosstalk	1kHz sine wave		–100		dB
DC output impedance	At mid-point input		1		Ω
Short-circuit current	AV_{DD} = 5V		50		mA
	AV_{DD} = 3V		20		
Power-up time	Coming out of power-down mode, AV_{DD} = 5V		2.5		µs
	Coming out of power-down mode, AV_{DD} = 3V		5		
AC PERFORMANCE					
SNR	BW = 20kHz, AV_{DD} = 5V, F_{OUT} = 1kHz, 1st 19 harmonics removed for SNR calculation		95		dB
THD			–85		
SFDR			87		
SINAD			84		
REFERENCE INPUT					
$V_{REF}H$ Voltage	$V_{REF}L < V_{REF}H$, $AV_{DD} – (V_{REF}H + V_{REF}L)/2 > 1.2V$	0		AV_{DD}	V
$V_{REF}L$ Voltage	$V_{REF}L < V_{REF}H$, $AV_{DD} – (V_{REF}H + V_{REF}L)/2 > 1.2V$	0		$AV_{DD}/2$	V
Reference input current	$V_{REF}L$ = GND, $V_{REF}H = AV_{DD}$ = 5V		180	250	µA
	$V_{REF}L$ = GND, $V_{REF}H = AV_{DD}$ = 3V		120	200	µA
Reference input impedance	$V_{REF}L < V_{REF}H$		31		kΩ
LOGIC INPUTS (3)					
V_{IL} Logic input LOW voltage	2.7V ≤ IOV_{DD} ≤ 5.5V			0.3 × IOV_{DD}	V
	1.8V ≤ IOV_{DD} ≤ 2.7V			0.1 × IOV_{DD}	
V_{IH} Logic input HIGH voltage	2.7 ≤ IOV_{DD} ≤ 5.5V	0.7 × IOV_{DD}			V
	1.8 ≤ IOV_{DD} < 2.7V	0.95 × IOV_{DD}			
Pin capacitance				3	pF
POWER REQUIREMENTS					
AV_{DD}		2.7		5.5	V
IOV_{DD}		1.8		5.5	
I_{DD} (normal mode)	Input code = 32768, no load, reference current not included				
IOI_{DD}	$V_{IH} = IOV_{DD}$ and V_{IL} = GND		10	20	µA
AV_{DD} = 3.6V to 5.5V			0.65	0.95	mA
AV_{DD} = 2.7V to 3.6V			0.6	0.9	
I_{DD} (all power-down modes)	$V_{IH} = IOV_{DD}$ and V_{IL} = GND				
AV_{DD} = 3.6V to 5.5V			0.7	2	µA
AV_{DD} = 2.7V to 3.6V			0.4	2	
POWER EFFICIENCY					
I_{OUT}/I_{DD}	I_L = 2mA, AV_{DD} = 5V		89		%
TEMPERATURE RANGE					
Specified performance		–40		+105	°C

(3) Ensured by design and characterization; not production tested.

PIN CONFIGURATION

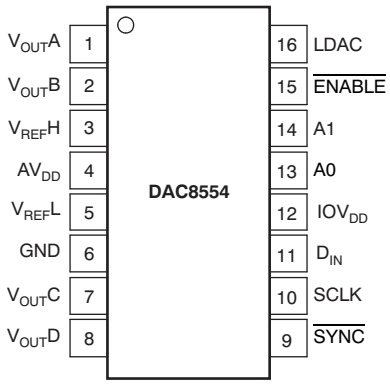

PIN DESCRIPTIONS

PIN	NAME	DESCRIPTION
1	$V_{OUT}A$	Analog output voltage from DAC A.
2	$V_{OUT}B$	Analog output voltage from DAC B.
3	$V_{ref}H$	Positive reference voltage input.
4	AV_{DD}	Power supply input, 2.7V to 5.5V.
5	$V_{ref}L$	Negative reference voltage input.
6	GND	Ground reference point for all circuitry on the part.
7	$V_{OUT}C$	Analog output voltage DAC C.
8	$V_{OUT}D$	Analog output voltage DAC D.
9	$\overline{SYNC}$	Level-triggered control input (active LOW). This is the frame synchronization signal for the input data. When $\overline{SYNC}$ goes LOW, it enables the input shift register and data is transferred in on the falling edges of the following clocks. The DAC is updated following the 24th clock (unless $\overline{SYNC}$ is taken HIGH before this edge, in which case the rising edge of $\overline{SYNC}$ acts as an interrupt and the write sequence is ignored by the DAC8554). Schmitt-Trigger-Logic input.
10	SCLK	Serial clock input. Data can be transferred at rates up to 50MHz. Schmitt-Trigger-Logic input.
11	D_{IN}	Serial data input. Data is clocked into the 24-bit input shift register on each falling edge of the serial clock input. Schmitt-Trigger-Logic input.
12	IOV_{DD}	Digital input-output power supply
13	A0	Address 0 — sets device address; see Table 2
14	A1	Address 1 — sets device address; see Table 2
15	$\overline{ENABLE}$	Active LOW, $\overline{ENABLE}$ LOW connects the SPI interface to the serial port.
16	LDAC	Load DACs, rising edge triggered, loads all DAC registers.

SERIAL WRITE OPERATION

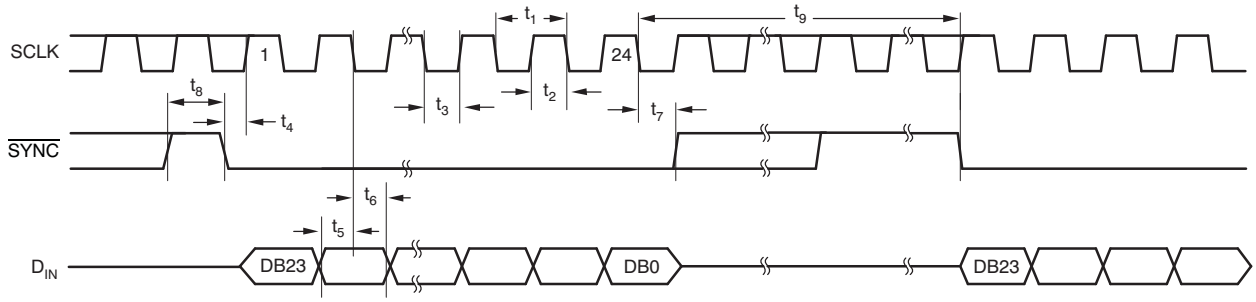

TIMING REQUIREMENTS(1)(2)

AV_{DD} = 2.7V to 5.5V, all specifications –40°C to +105°C (unless otherwise noted)

PARAMETER		TEST CONDITIONS	MIN	TYP	MAX	UNIT
t_1(3)	SCLK cycle time	IOV_{DD} = AV_{DD} = 2.7V to 3.6V	40			ns
		IOV_{DD} = AV_{DD} = 3.6V to 5.5V	20			
t_2	SCLK HIGH time	IOV_{DD} = AV_{DD} = 2.7V to 3.6V	20			ns
		IOV_{DD} = AV_{DD} = 3.6V to 5.5V	10			
t_3	SCLK LOW time	IOV_{DD} = AV_{DD} = 2.7V to 3.6V	20			ns
		IOV_{DD} = AV_{DD} = 3.6V to 5.5V	10			
t_4	$\overline{SYNC}$ falling edge to SCLK rising edge setup time	IOV_{DD} = AV_{DD} = 2.7V to 3.6V	0			ns
		IOV_{DD} = AV_{DD} = 3.6V to 5.5V	0			
t_5	Data setup time	IOV_{DD} = AV_{DD} = 2.7V to 3.6V	5			ns
		IOV_{DD} = AV_{DD} = 3.6V to 5.5V	5			
t_6	Data hold time	IOV_{DD} = AV_{DD} = 2.7V to 3.6V	4.5			ns
		IOV_{DD} = AV_{DD} = 3.6V to 5.5V	4.5			
t_7	24th SCLK falling edge to $\overline{SYNC}$ rising edge	IOV_{DD} = AV_{DD} = 2.7V to 3.6V	0			ns
		IOV_{DD} = AV_{DD} = 3.6V to 5.5V	0			
t_8	Minimum $\overline{SYNC}$ HIGH time	IOV_{DD} = AV_{DD} = 2.7V to 3.6V	40			ns
		IOV_{DD} = AV_{DD} = 3.6V to 5.5V	20			
t_9	24th $\overline{SCLK}$ falling edge to SYNC falling edge	IOV_{DD} = AV_{DD} = 2.7V to 5.5V	130			ns

(1) All input signals are specified with $t_R = t_F$ = 3ns (10% to 90% of AV_{DD}) and timed from a voltage level of $(V_{IL} + V_{IH})/2$.
(2) See Serial Write Operation timing diagram.
(3) Maximum SCLK frequency is 50MHz at IOV_{DD} = AV_{DD} = 3.6V to 5.5V and 25MHz at IOV_{DD} = AV_{DD} = 2.7V to 3.6V.

TYPICAL CHARACTERISTICS: V_{DD} = 5V

At T_A = +25°C, unless otherwise noted.

LINEARITY ERROR AND DIFFERENTIAL LINEARITY ERROR vs DIGITAL INPUT CODE

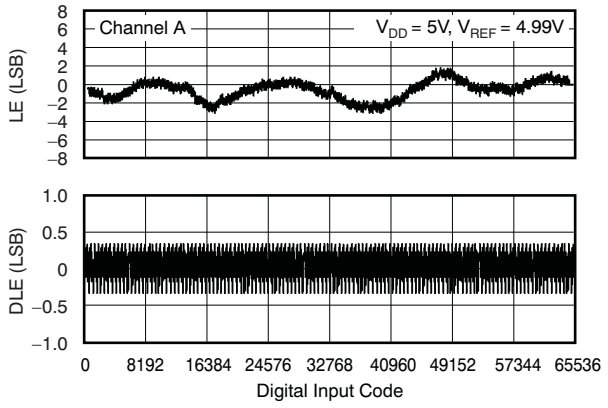

Figure 1.

LINEARITY ERROR AND DIFFERENTIAL LINEARITY ERROR vs DIGITAL INPUT CODE

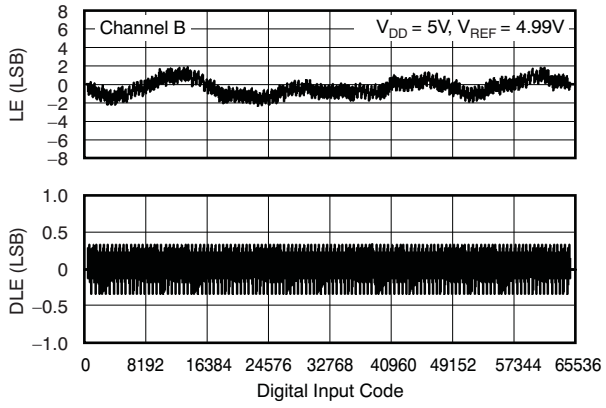

Figure 2.

LINEARITY ERROR AND DIFFERENTIAL LINEARITY ERROR vs DIGITAL INPUT CODE

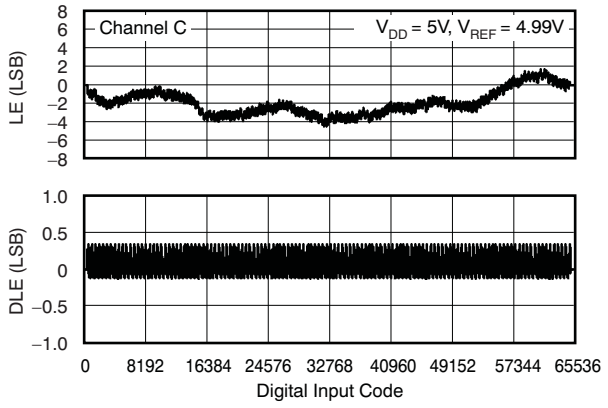

Figure 3.

LINEARITY ERROR AND DIFFERENTIAL LINEARITY ERROR vs DIGITAL INPUT CODE

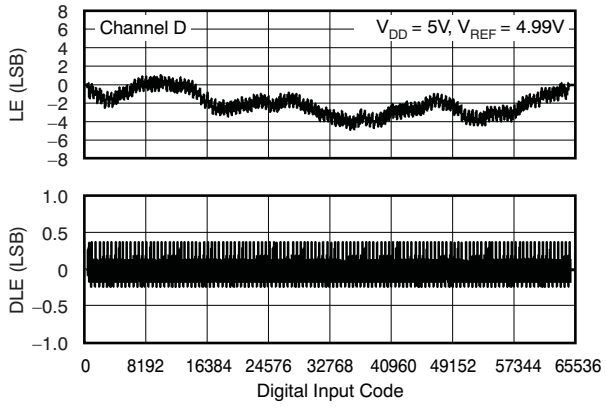

Figure 4.

ZERO-SCALE ERROR vs TEMPERATURE

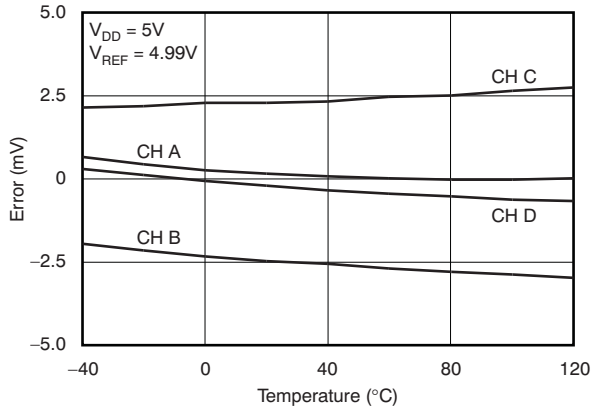

Figure 5.

FULL-SCALE ERROR vs TEMPERATURE

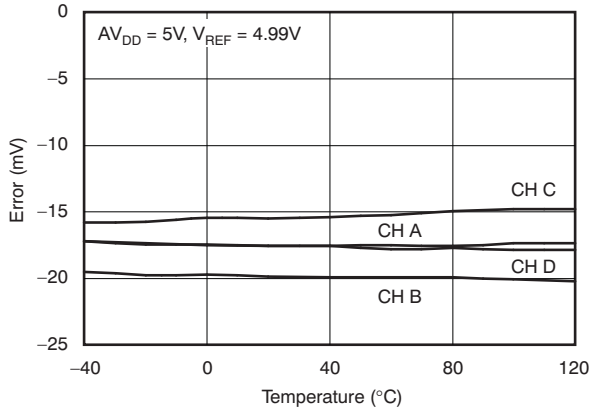

Figure 6.

TYPICAL CHARACTERISTICS: V_{DD} = 5V (continued)

At T_A = +25°C, unless otherwise noted.

SOURCE CURRENT CAPABILITY (ALL CHANNELS)

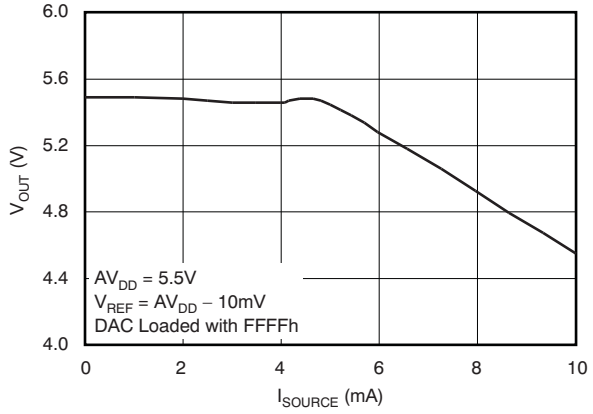

Figure 7.

SUPPLY CURRENT vs LOGIC INPUT VOLTAGE

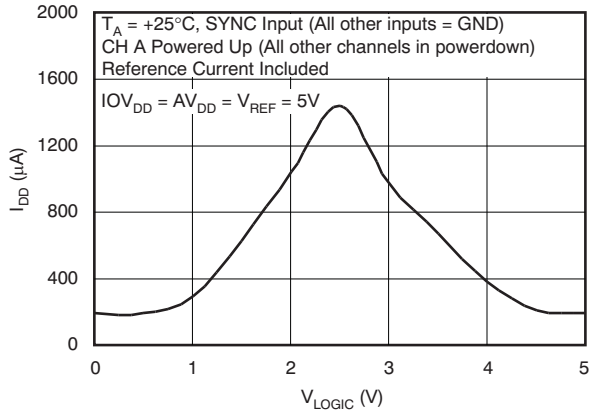

Figure 8.

POWER SPECTRAL DENSITY

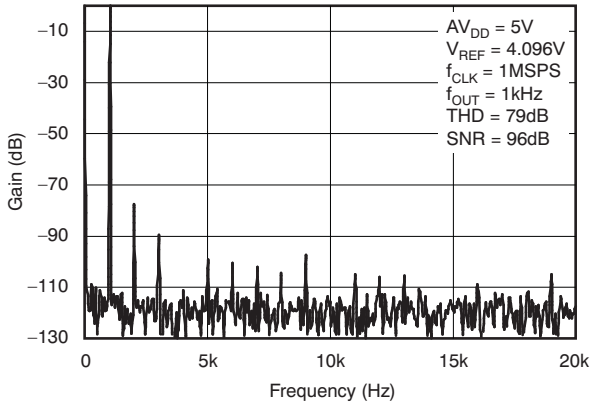

Figure 9.

TOTAL HARMONIC DISTORTION vs OUTPUT FREQUENCY

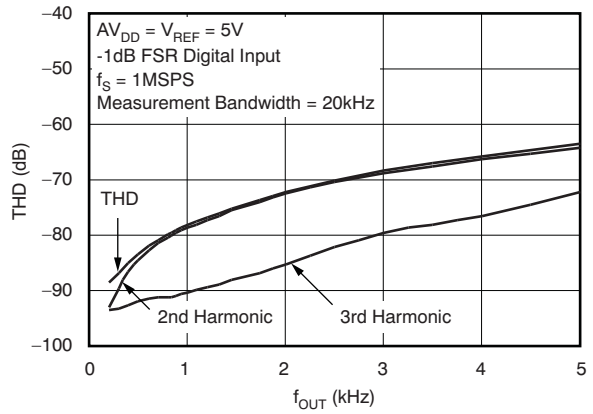

Figure 10.

FULL-SCALE SETTLING TIME: 5V RISING EDGE

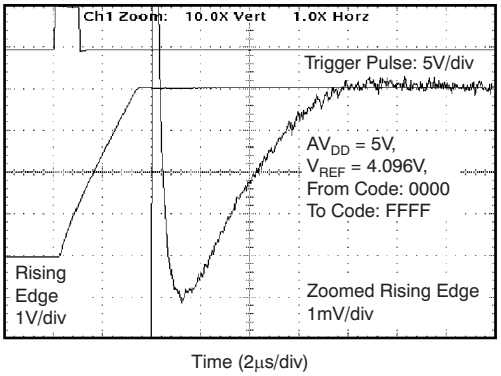

Figure 11.

FULL-SCALE SETTLING TIME: 5V FALLING EDGE

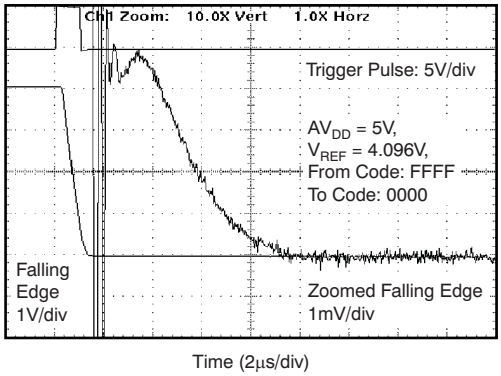

Figure 12.

TYPICAL CHARACTERISTICS: V_{DD} = 5V (continued)

At T_A = +25°C, unless otherwise noted.

HALF-SCALE SETTLING TIME: 5V RISING EDGE

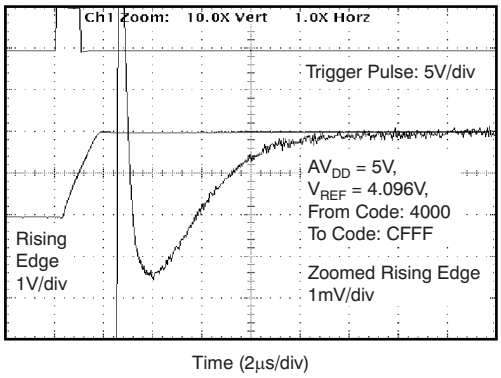

Figure 13.

HALF-SCALE SETTLING TIME: 5V FALLING EDGE

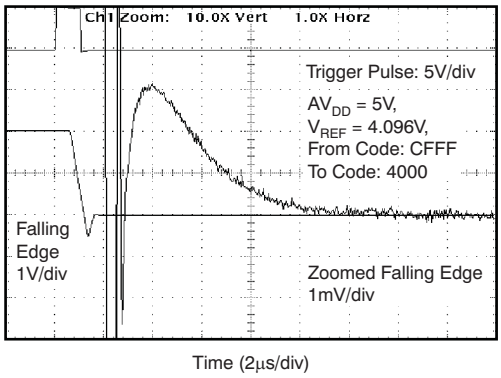

Figure 14.

GLITCH ENERGY: 5V, 1LSB STEP, RISING EDGE

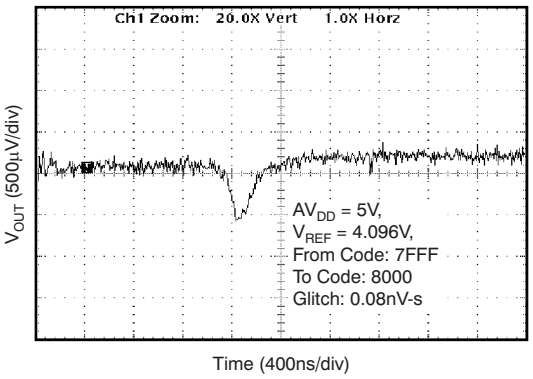

Figure 15.

GLITCH ENERGY: 5V, 1LSB STEP, FALLING EDGE

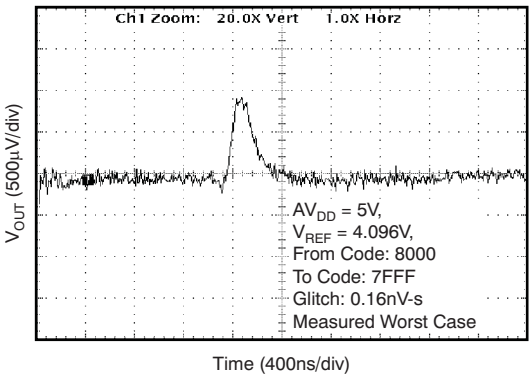

Figure 16.

GLITCH ENERGY: 5V, 16LSB STEP, RISING EDGE

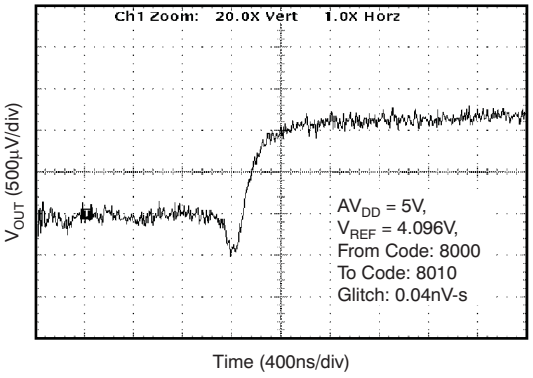

Figure 17.

GLITCH ENERGY: 5V, 16LSB STEP, FALLING EDGE

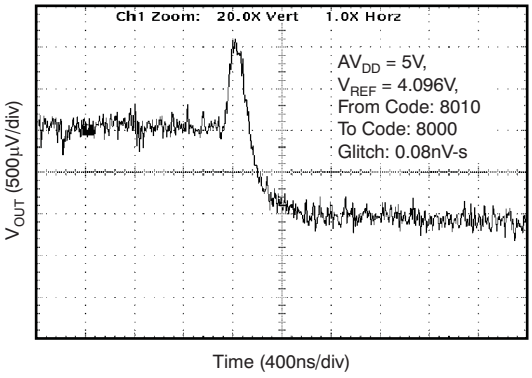

Figure 18.

TYPICAL CHARACTERISTICS: V_{DD} = 5V (continued)

At T_A = +25°C, unless otherwise noted.

GLITCH ENERGY: 5V, 256LSB STEP, RISING EDGE

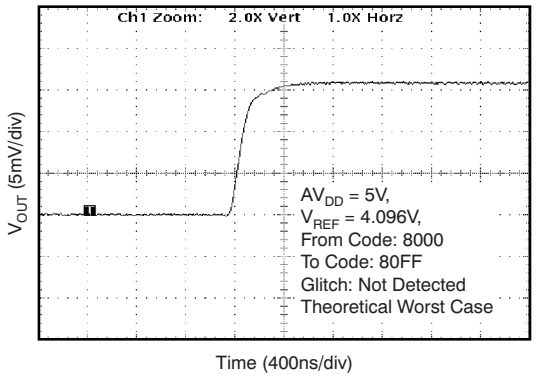

Figure 19.

GLITCH ENERGY: 5V, 256LSB STEP, FALLING EDGE

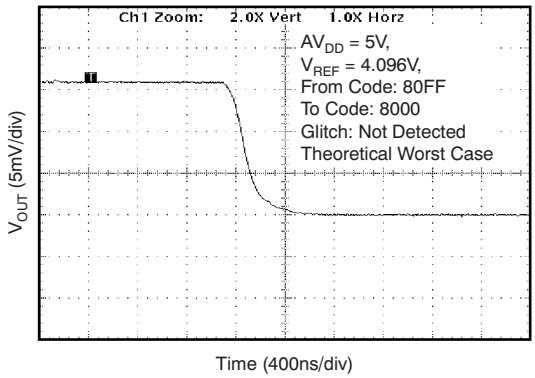

Figure 20.

OUTPUT NOISE DENSITY

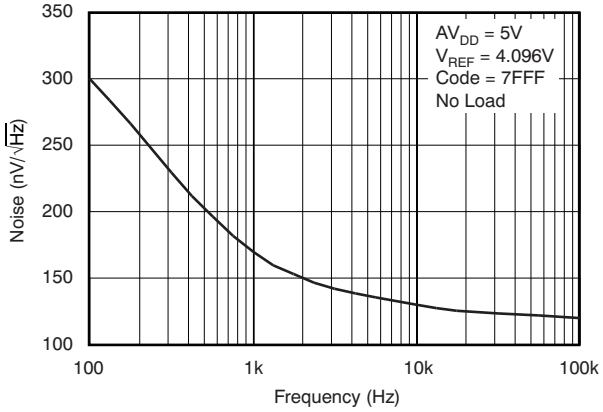

Figure 21.

SIGNAL-TO-NOISE RATIO vs OUTPUT FREQUENCY

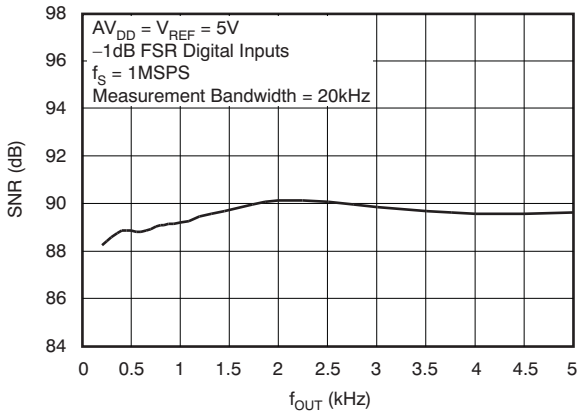

Figure 22.

TYPICAL CHARACTERISTICS: V_{DD} = 2.7V

At T_A = +25°C, unless otherwise noted.

LINEARITY ERROR AND DIFFERENTIAL LINEARITY ERROR vs DIGITAL INPUT CODE

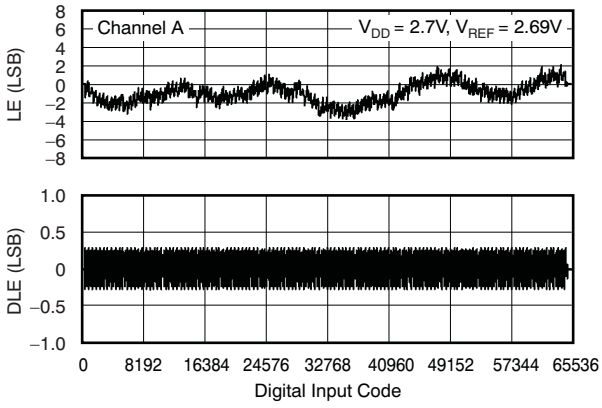

Figure 23.

LINEARITY ERROR AND DIFFERENTIAL LINEARITY ERROR vs DIGITAL INPUT CODE

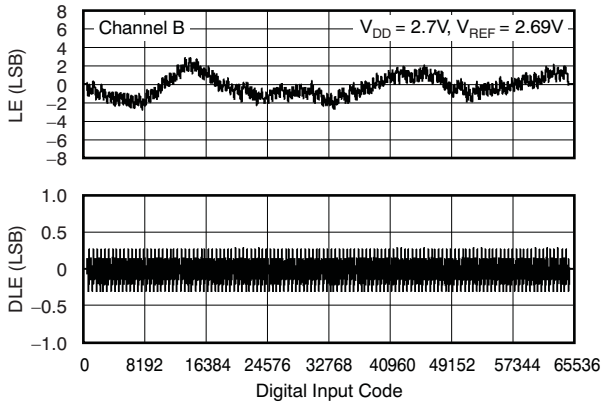

Figure 24.

LINEARITY ERROR AND DIFFERENTIAL LINEARITY ERROR vs DIGITAL INPUT CODE

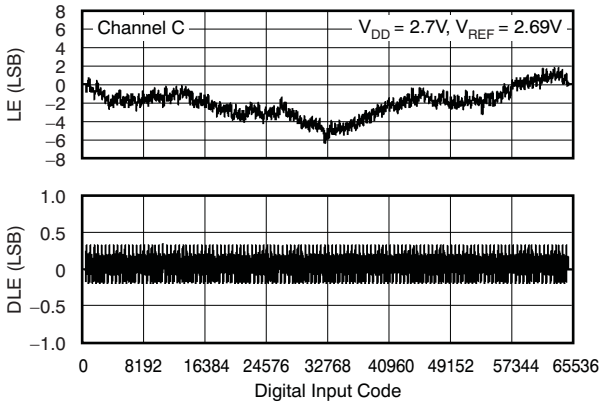

Figure 25.

LINEARITY ERROR AND DIFFERENTIAL LINEARITY ERROR vs DIGITAL INPUT CODE

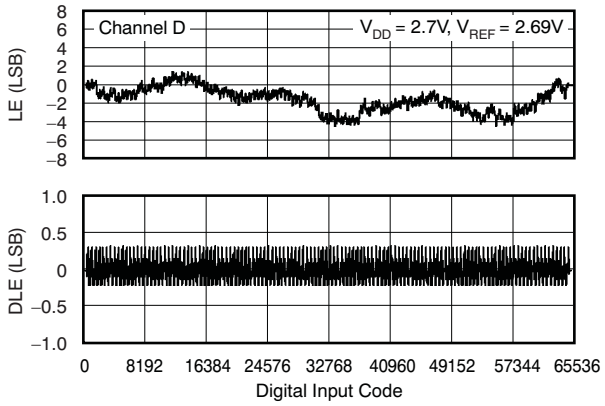

Figure 26.

ZERO-SCALE ERROR vs TEMPERATURE

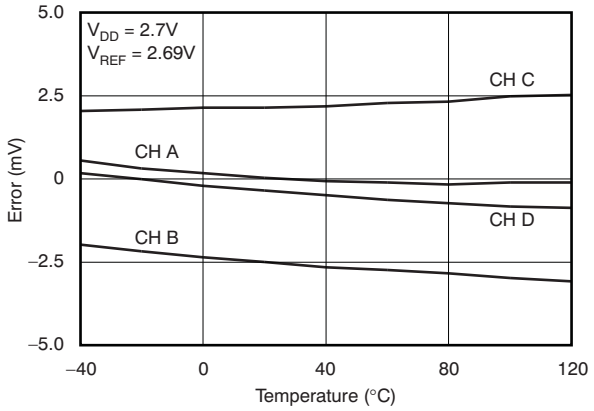

Figure 27.

FULL-SCALE ERROR vs TEMPERATURE

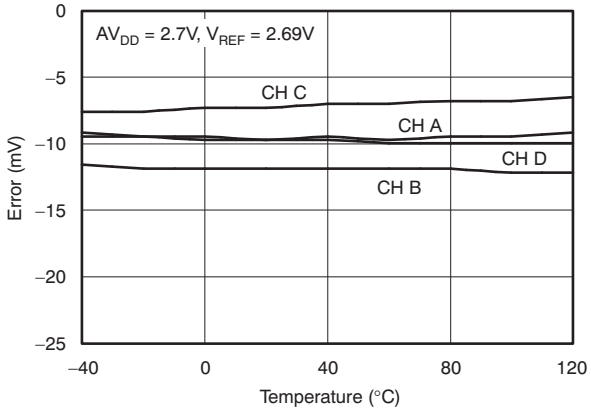

Figure 28.

TYPICAL CHARACTERISTICS: V_{DD} = 2.7V (continued)

At T_A = +25°C, unless otherwise noted.

SOURCE CURRENT CAPABILITY (ALL CHANNELS)

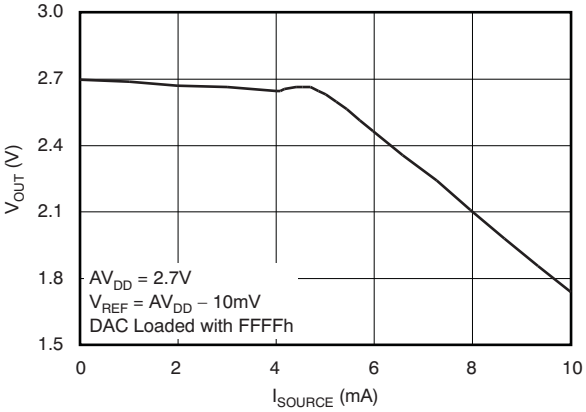

Figure 29.

SUPPLY CURRENT vs LOGIC INPUT VOLTAGE

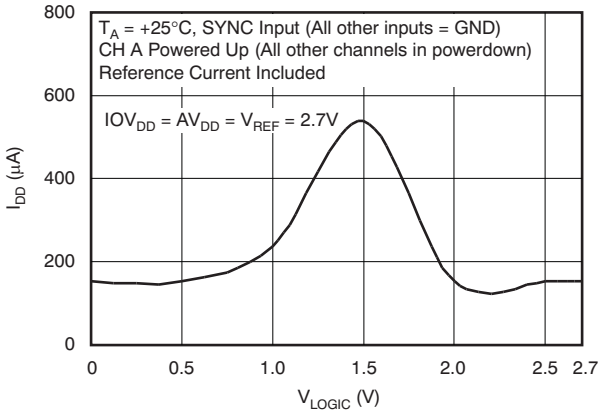

Figure 30.

FULL-SCALE SETTLING TIME: 2.7V RISING EDGE

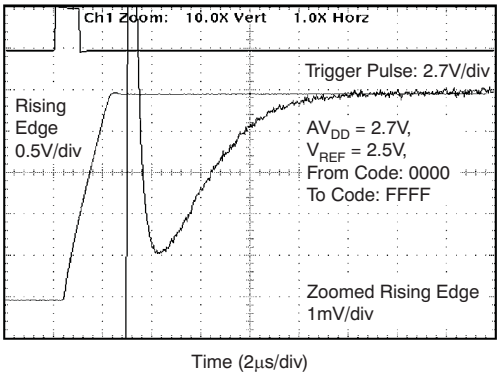

Figure 31.

FULL-SCALE SETTLING TIME: 2.7V FALLING EDGE

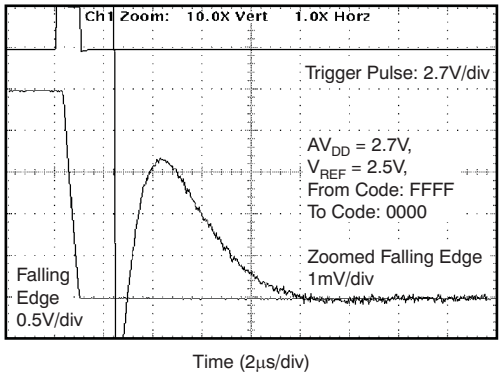

Figure 32.

HALF-SCALE SETTLING TIME: 2.7V RISING EDGE

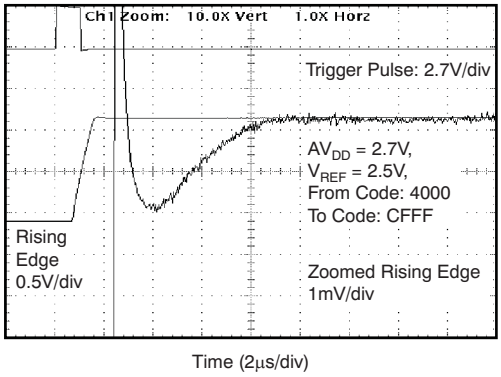

Figure 33.

HALF-SCALE SETTLING TIME: 2.7V FALLING EDGE

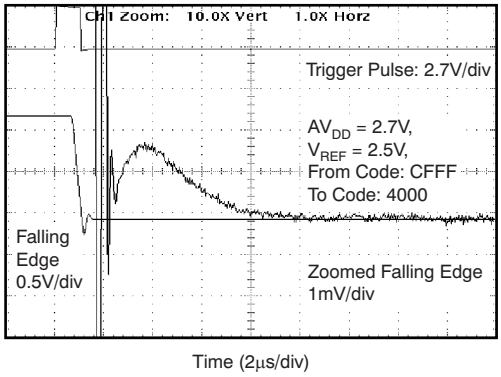

Figure 34.

TYPICAL CHARACTERISTICS: V_{DD} = 2.7V (continued)

At T_A = +25°C, unless otherwise noted.

GLITCH ENERGY: 2.7V, 1LSB STEP, RISING EDGE

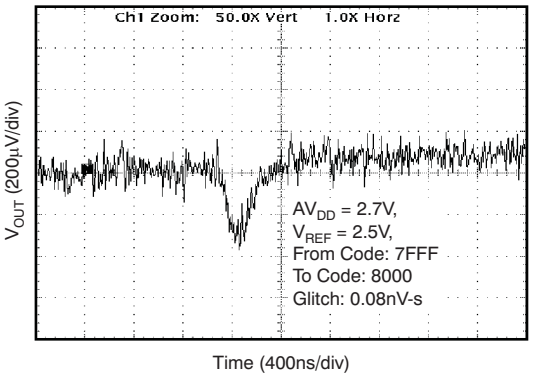

Figure 35.

GLITCH ENERGY: 2.7V, 1LSB STEP, FALLING EDGE

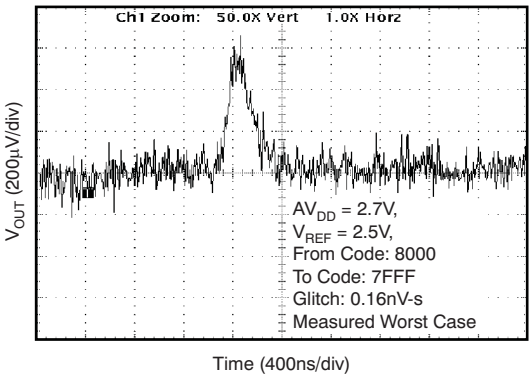

Figure 36.

GLITCH ENERGY: 2.7V, 16LSB STEP, RISING EDGE

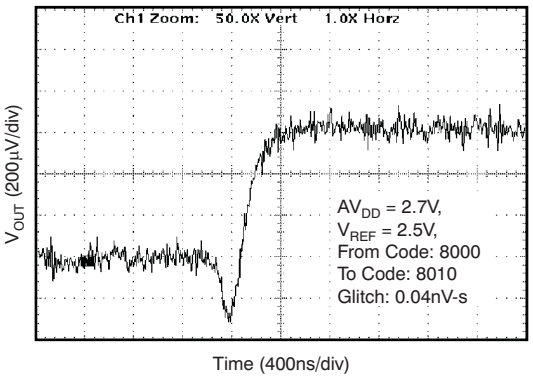

Figure 37.

GLITCH ENERGY: 2.7V, 16LSB STEP, FALLING EDGE

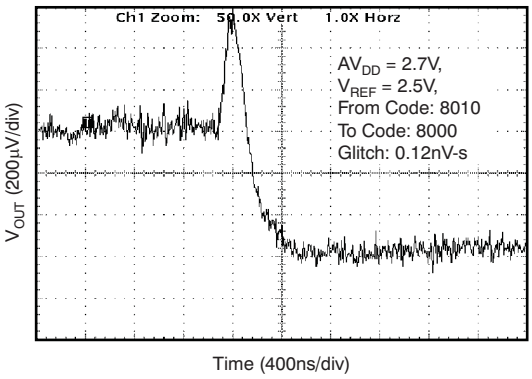

Figure 38.

GLITCH ENERGY: 2.7V, 256LSB STEP, RISING EDGE

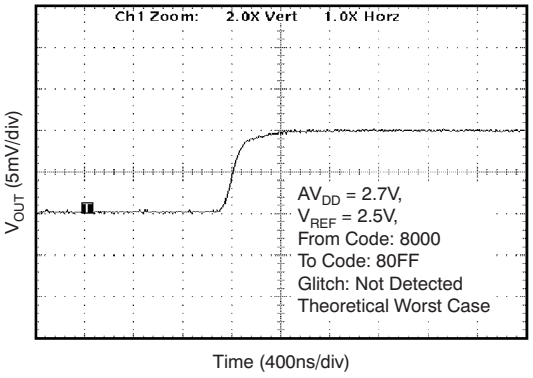

Figure 39.

GLITCH ENERGY: 2.7V, 256LSB STEP, FALLING EDGE

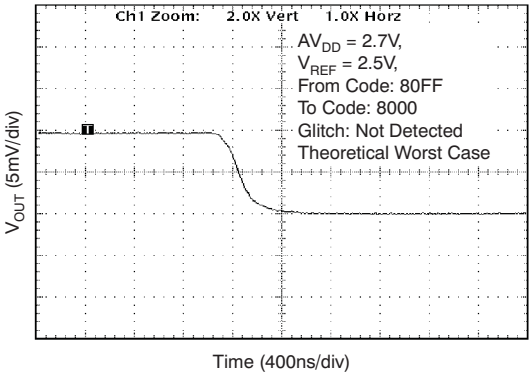

Figure 40.

TYPICAL CHARACTERISTICS: V_{DD} = 5V and 2.7V

At T_A = +25°C, unless otherwise noted.

SINK CURRENT CAPABILITY (ALL CHANNELS)

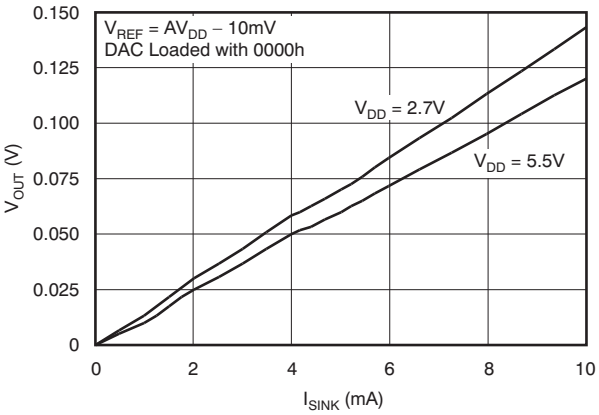

Figure 41.

SUPPLY CURRENT vs DIGITAL INPUT CODE

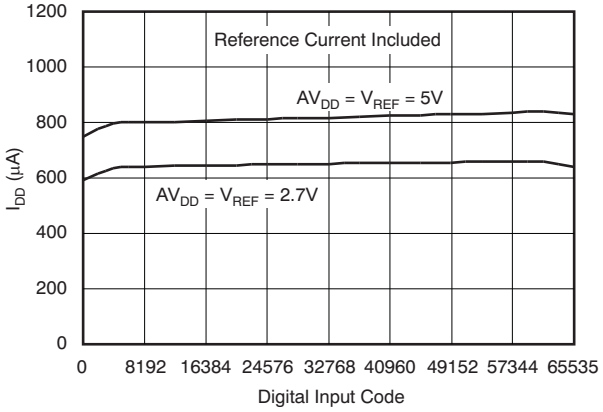

Figure 42.

SUPPLY CURRENT vs FREE-AIR TEMPERATURE

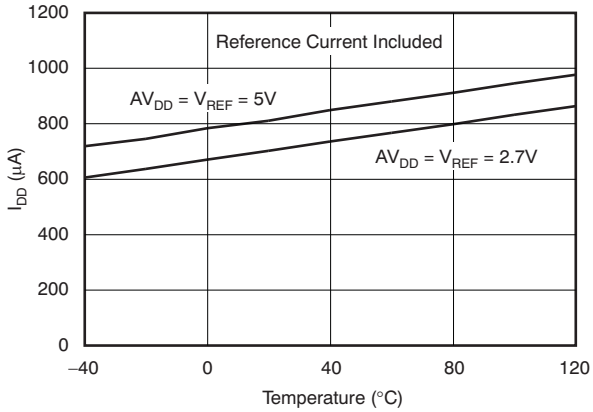

Figure 43.

SUPPLY CURRENT vs SUPPLY VOLTAGE

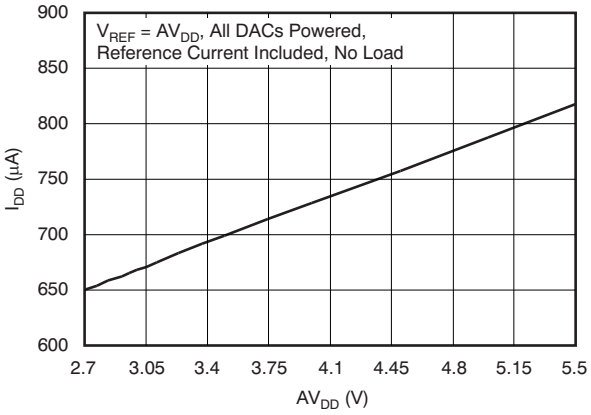

Figure 44.

THEORY OF OPERATION

DAC SECTION

The architecture of each channel of the DAC8554 consists of a resistor-string DAC followed by an output buffer amplifier. Figure 45 shows a simplified block diagram of the DAC architecture.

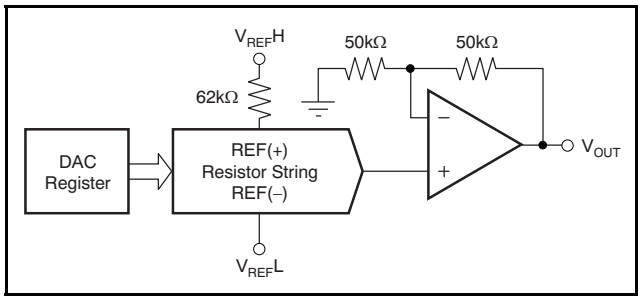

Figure 45. DAC8554 Architecture

The input coding for each device is unipolar straight binary, so the ideal output voltage is given by:

$$V_{OUT}X = 2 \times V_{REF}L + (V_{REF}H - V_{REF}L) \times \frac{D_{IN}}{65536}$$

where D_{IN} = decimal equivalent of the binary code that is loaded to the DAC register; it can range from 0 to 65535.

RESISTOR STRING

The resistor string section is shown in Figure 46. It is simply a divide-by-2 resistor followed by a string of resistors. The code loaded into the DAC register determines at which node on the string the voltage is tapped off. This voltage is then applied to the output amplifier by closing one of the switches connecting the string to the amplifier.

OUTPUT AMPLIFIER

Each output buffer amplifier is capable of generating rail-to-rail voltages on its output that approaches an output range of 0V to AV_{DD} (gain and offset errors must be taken into account). Each buffer is capable of driving a load of 2kΩ in parallel with 1000pF to GND. The source and sink capabilities of the output amplifier can be seen in the Typical Characteristics.

SERIAL INTERFACE

The DAC8554 uses a 3-wire serial interface (SYNC, SCLK, and D_{IN}), which is compatible with SPI, QSPI™, and Microwire™ interface standards, as well as most DSPs. See the Serial Write Operation timing diagram for an example of a typical write sequence.

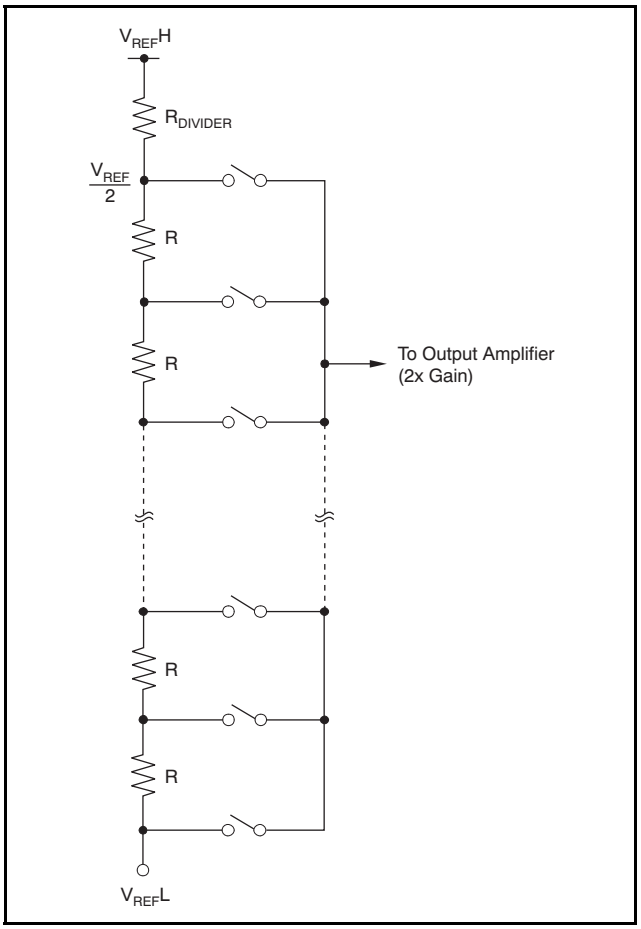

Figure 46. Resistor String

The write sequence begins by bringing the $\overline{SYNC}$ line LOW. Data from the D_{IN} line are clocked into the 24-bit shift register on each falling edge of SCLK. The serial clock frequency can be as high as 50MHz, making the DAC8554 compatible with high-speed DSPs. On the 24th falling edge of the serial clock, the last data bit is clocked into the shift register and the shift register gets locked. Further clocking does not change the shift register data. Once 24 bits are locked into the shift register, the eight MSBs are used as control bits and the 16 LSBs are used as data. After receiving the 24th falling clock edge, The DAC8554 decodes the eight control bits and 16 data bits to perform the required function, without waiting for a $\overline{SYNC}$ rising edge. A new SPI sequence starts at the next falling edge of $\overline{SYNC}$. A rising edge of $\overline{SYNC}$ before the 24-bit sequence is complete resets the SPI interface; no data transfer occurs.

After the 24th falling edge of SCLK is received, the $\overline{SYNC}$ line may be kept LOW or brought HIGH. In either case, the minimum delay time from the 24th falling SCLK edge to the next falling $\overline{SYNC}$ edge must be met in order to properly begin the next cycle.

To assure the lowest power consumption of the device, care should be taken that the levels are as close to each rail as possible. [Refer to the *Typical Characteristics* section for the *Supply Current vs Logic Input Voltage* (5V and 2.7V) transfer characteristic curves.]

IOV_{DD} AND VOLTAGE TRANSLATORS

The IOV_{DD} pin powers the digital input structures of the DAC8554. For single-supply operation, it can be tied to AV_{DD}. For dual-supply operation, the IOV_{DD} pin provides interface flexibility with various CMOS logic families and should be connected to the logic supply of the system. Analog circuits and internal logic of the DAC8554 use AV_{DD} as the supply voltage. The external logic high inputs get translated to AV_{DD} by level shifters. These level shifters use the IOV_{DD} voltage as a reference to shift the incoming logic HIGH levels to AV_{DD}. IOV_{DD} is ensured to operate from 2.7V to 5.5V regardless of the AV_{DD} voltage, which ensures compatibility with various logic families. Although specified down to 2.7V, IOV_{DD} will operate at as low as 1.8V with degraded timing and temperature performance. For lowest power consumption, logic V_{IH} levels should be as close as possible to IOV_{DD}, and logic V_{IL} levels should be as close as possible to GND voltages

INPUT SHIFT REGISTER

The input shift register (SR) of the DAC8554 is 24 bits wide, as shown in Figure 47, and is made up of eight control bits (DB23–DB16) and 16 data bits (DB15–DB0). The first two control bits (DB23 and DB22) are the address match bits. The DAC8554 offers additional hardware-enabled addressing capability, allowing a single host to talk to up to four DAC8554s through a single SPI bus without any glue logic, enabling up to 16-channel operation. The state of DB23 should match the state of pin A1; similarly, the state of DB22 should match the state of pin A0. If there is no match, the control command and the data (DB21...DB0) are ignored by the DAC8554. That is, if there is no match, the DAC8554 is not addressed. Address matching can be overridden by the broadcast update.

LD1 (DB21) and LD0 (DB20) control the updating of each analog output with the specified 16-bit data value or power-down command. Bit DB19 is a *don't care* bit that does not affect the operation of the DAC8554, and can be '1' or '0'. The DAC channel select bits (DB18, DB17) control the destination of the data (or power-down command) from DAC A through DAC D. The final control bit, PD0 (DB16), selects the power-down mode of the DAC8554 channels.

DB23											DB12
A1	A0	LD1	LD0	X	DAC Select 1	DAC Select 0	PD0	D15	D14	D13	D12
DB11											DB0
D11	D10	D9	D8	D7	D6	D5	D4	D3	D2	D1	D0

Figure 47. DAC8554 Data Input Register Format

The DAC8554 also supports a number of different load commands. The load commands include broadcast commands to address all the DAC8554s on an SPI bus. The load commands can be summarized as follows:

DB21 = 0 and DB20 = 0: Single-channel store. The temporary register (data buffer) corresponding to a DAC selected by DB18 and DB17 is updated with the contents of SR data (or power-down).

DB21 = 0 and DB20 = 1: Single-channel update. The temporary register and DAC register corresponding to a DAC selected by DB18 and DB17 are updated with the contents of SR data (or power-down).

DB21 = 1 and DB20 = 0: Simultaneous update. A channel selected by DB18 and DB17 gets updated with the SR data, and simultaneously, all the other channels get updated with previous stored data (or power-down) from temporary registers.

DB21 = 1 and DB20 = 1: Broadcast update. All the DAC8554s on the SPI bus respond, regardless of address matching. If DB18 = 0, then SR data gets ignored, all channels from all DAC8554s get updated with previously stored data (or power-down). If DB18 = 1, then SR data (or power-down) updates all channels of all DAC8554s in the system. This broadcast update feature allows the simultaneous update of up to 16 channels.

Power-down/data selection is as follows:

DB16 is a power-down flag. If this flag is set, then DB15 and DB14 select one of the four power-down modes of the device as described in Table 1. If DB16 = 1, DB15 and DB14 no longer represent the two MSBs of data, but represent a power-down condition described in Table 1. Similar to data, power-down conditions can be stored at the temporary registers of each DAC. It is possible to update DACs simultaneously either with data, power-down, or a combination of both.

Refer to Table 2 for more information.

Table 1. DAC8554 Power-Down Modes

PD0 (DB16)	PD1 (DB15)	PD2 (DB14)	OPERATING MODE
1	0	0	Output high impedance
1	0	1	Output typically 1kΩ to GND
1	1	0	Output typically 100kΩ to GND
1	1	1	Output high impedance

Table 2. Control Matrix

DB23	DB22	DB21	DB20	DB19	DB18	DB17	DB16	DB15	DB14	DB13-DB0	
A1	A0	LD 1	LD 0	Don't Care	DAC Sel 1	DAC Sel 0	PD0	MSB	MSB-1	MSB-2...LSB	
(Address Select)											DESCRIPTION
0/1	0/1	See Below									This address selects 1 of 4 possible devices on a single SPI data bus based on each device's address pin(s) state.
A0 and A1 should correspond to the package address set via pins 13 and 14.		0	0	X	0	0	0	Data			Write to buffer A with data
		0	0	X	0	1	0	Data			Write to buffer B with data
		0	0	X	1	0	0	Data			Write to buffer C with data
		0	0	X	1	1	0	Data			Write to buffer D with data
		0	0	X	(00, 01, 10, or 11)		1	See Table 1		0	Write to buffer (selected by DB17 and DB18) with power-down command
		0	1	X	(00, 01, 10, or 11)		0	Data			Write to buffer with data and load DAC (selected by DB17 and DB18)
		0	1	X	(00, 01, 10, or 11)		1	See Table 1		0	Write to buffer with power-down command and load DAC (selected by DB17 and DB18)
		1	0	X	(00, 01, 10, or 11)		0	Data			Write to buffer with data (selected by DB17 and DB18) and then load all DACs simultaneously from their corresponding buffers.
		1	0	X	(00, 01, 10, or 11)		1	See Table 1		0	Write to buffer with power-down command (selected by DB17 and DB18) and then load all DACs simultaneously from their corresponding buffers.
Broadcast Modes											
X	X	1	1	X	0	X	X	X			Simultaneously update all channels of all DAC8554 devices in the system with data stored in each channels temporary register.
X	X	1	1	X	1	X	0	Data			Write to all devices and load all DACs with SR data
X	X	1	1	X	1	X	1	See Table 1		0	Write to all devices and load all DACs with power-down command in SR.

$\overline{\text{SYNC}}$ INTERRUPT

In a normal write sequence, the $\overline{\text{SYNC}}$ line is kept LOW for at least 24 falling edges of SCLK and the addressed DAC register is updated on the 24th falling edge. However, if $\overline{\text{SYNC}}$ is brought HIGH before the 24th falling edge, it acts as an interrupt to the write sequence; the shift register is reset and the write sequence is discarded. Neither an update of the data buffer contents, DAC register contents, nor a change in the operating mode occurs (see Figure 48).

POWER-ON RESET

The DAC8554 contains a power-on reset circuit that controls the output voltage during power-up. On power-up, the DAC registers are filled with zeros and the output voltages are set to zero-scale; they remain that way until a valid write sequence and load command are made to the respective DAC channel. The power-on reset is useful in applications where it is important to know the state of the output of each DAC while the device is in the process of powering up. No device pin should be brought high before power is applied to the device.

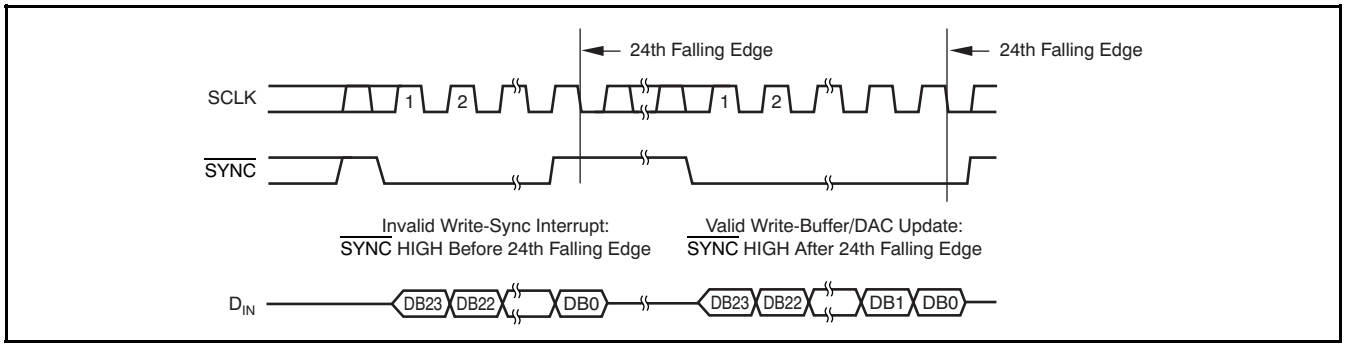

Figure 48. Interrupt and Valid $\overline{\text{SYNC}}$ Timing

POWER-DOWN MODES

The DAC8554 utilizes four modes of operation. These modes are accessed by setting three bits (PD2, PD1, and PD0) in the shift register and performing a *Load* action to the DACs. The DAC8554 offers a very flexible power-down interface based on channel register operation. A channel consists of a single 16-bit DAC with power-down circuitry, a temporary storage register (TR), and a DAC register (DR). TR and DR are both 18 bits wide. Two MSBs represent a power-down condition and 16 LSBs represent data for TR and DR. By adding bits 17 and 18 to TR and DR, a power-down condition can be temporarily stored and used as data. Internal circuits ensure that DB15 and DB14 get transferred to TR17 and TR16 (DR17 and DR16), when DB16 = 1.

The DAC8554 treats the power-down condition as data; all the operational modes are still valid for power-down. It is possible to broadcast a power-down condition to all the DAC8554s in a system, or it is possible to simultaneously power-down a channel while updating data on other channels.

DB16, DB15, and DB14 = '100' (or '111') represent a power-down condition with Hi-Z output impedance for a selected channel. '101' represents a power-down condition with 1kΩ output impedance, and '110' represents a power-down condition with 100kΩ output impedance.

Individual channels can be separately powered down, reducing the total power consumption. When all channels are powered down, the DAC8554 power consumption drops below 2µA. There is no power-up command. When a channel is updated with data, it automatically exits power-down. All channels exit power-down simultaneously after a broadcast data update. The time to exit power-down is approximately 5µs. See Table 1 and Table 2 for power-down operation details.

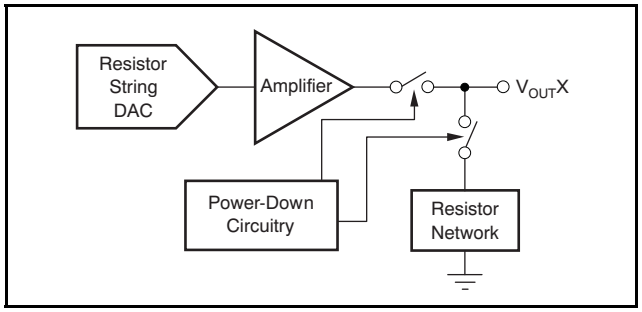

Figure 49. Output Stage During Power-Down (High-Impedance)

OPERATION EXAMPLES

Example 1: Write to Data Buffer A Through Buffer D; Load DAC A Through DAC D Simultaneously

- 1st — Write to data buffer A:

A1	A0	LD1	LD0	DC	DAC Sel 1	DAC Sel 0	PD0	DB15	—	DB1	DB0
0	0	0	0	X	0	0	0	D15	—	D1	D0

- 2nd — Write to data buffer B:

A1	A0	LD1	LD0	DC	DAC Sel 1	DAC Sel 0	PD0	DB15	—	DB1	DB0
0	0	0	0	X	0	1	0	D15	—	D1	D0

- 3rd — Write to data buffer C:

A1	A0	LD1	LD0	DC	DAC Sel 1	DAC Sel 0	PD0	DB15	—	DB1	DB0
0	0	0	0	X	1	0	0	D15	—	D1	D0

- 4th — Write to data buffer D and simultaneously update all DACs:

A1	A0	LD1	LD0	DC	DAC Sel 1	DAC Sel 0	PD0	DB15	—	DB1	DB0
0	0	1	0	X	1	1	0	D15	—	D1	D0

The DAC A, DAC B, DAC C, and DAC D analog outputs simultaneously settle to the specified values upon completion of the 4th write sequence. (The DAC voltages update simultaneously after the 24th SCLK falling edge of the 4th write cycle).

Example 2: Load New Data to DAC A Through DAC D Sequentially

- 1st — Write to data buffer A and load DAC A: DAC A output settles to specified value upon completion:

A1	A0	LD1	LD0	DC	DAC Sel 1	DAC Sel 0	PD0	DB15	—	DB1	DB0
0	0	0	1	X	0	0	0	D15	—	D1	D0

- 2nd — Write to data buffer B and load DAC B: DAC B output settles to specified value upon completion:

A1	A0	LD1	LD0	DC	DAC Sel 1	DAC Sel 0	PD0	DB15	—	DB1	DB0
0	0	0	1	X	0	1	0	D15	—	D1	D0

- 3rd — Write to data buffer C and load DAC C: DAC C output settles to specified value upon completion:

A1	A0	LD1	LD0	DC	DAC Sel 1	DAC Sel 0	PD0	DB15	—	DB1	DB0
0	0	0	1	X	1	0	0	D15	—	D1	D0

- 4th — Write to data buffer D and load DAC D: DAC D output settles to specified value upon completion:

A1	A0	LD1	LD0	DC	DAC Sel 1	DAC Sel 0	PD0	DB15	—	DB1	DB0
0	0	0	1	X	1	1	0	D15	—	D1	D0

After completion of each write cycle, DAC analog output settles to the voltage specified.

Example 3: Power-Down DAC A and DAC B to 1kΩ and Power-Down DAC C and DAC D to 100kΩ Simultaneously

- Write power-down command to data buffer A: DAC A to 1kΩ.

A1	A0	LD1	LD0	DC	DAC Sel 1	DAC Sel 0	PD0	DB15	DB14	DB13	—
0	0	0	0	X	0	0	1	0	1	X	—

- Write power-down command to data buffer B: DAC B to 1kΩ.

A1	A0	LD1	LD0	DC	DAC Sel 1	DAC Sel 0	PD0	DB15	DB14	DB13	—
0	0	0	0	X	0	1	1	0	1	X	—

- Write power-down command to data buffer C: DAC C to 1kΩ.

A1	A0	LD1	LD0	DC	DAC Sel 1	DAC Sel 0	PD0	DB15	DB14	DB13	—
0	0	0	0	X	1	0	1	1	0	X	—

- Write power-down command to data buffer D: DAC D to 100kΩ and simultaneously update all DACs.

A1	A0	LD1	LD0	DC	DAC Sel 1	DAC Sel 0	PD0	DB15	DB14	DB13	—
0	0	1	0	X	1	1	1	1	0	X	—

The DAC A, DAC B, DAC C, and DAC D analog outputs simultaneously power-down to each respective specified mode upon completion of the 4th write sequence.

Example 4: Power-Down DAC A Through DAC D to High-Impedance Sequentially:

- Write power-down command to data buffer A and load DAC A: DAC A output = Hi-Z:

A1	A0	LD1	LD0	DC	DAC Sel 1	DAC Sel 0	PD0	DB15	DB14	DB13	—
0	0	0	1	X	0	0	1	1	1	X	—

- Write power-down command to data buffer B and load DAC B: DAC B output = Hi-Z:

A1	A0	LD1	LD0	DC	DAC Sel 1	DAC Sel 0	PD0	DB15	DB14	DB13	—
0	0	0	1	X	0	1	1	1	1	x	—

- Write power-down command to data buffer C and load DAC C: DAC C output = Hi-Z:

A1	A0	LD1	LD0	DC	DAC Sel 1	DAC Sel 0	PD0	DB15	DB14	DB13	—
0	0	0	1	X	1	0	1	1	1	X	—

- Write power-down command to data buffer D and load DAC D: DAC D output = Hi-Z:

A1	A0	LD1	LD0	DC	DAC Sel 1	DAC Sel 0	PD0	DB15	DB14	DB13	—
0	0	0	1	X	1	1	1	1	1	X	—

The DAC A, DAC B, DAC C, and DAC D analog outputs sequentially power-down to high-impedance upon completion of the 1st, 2nd, 3rd, and 4th write sequences, respectively.

LDAC FUNCTIONALITY

The DAC8554 offers both a software and hardware simultaneous update function. The DAC8554 double-buffered architecture has been designed so that new data can be entered for each DAC without disturbing the analog outputs. The software simultaneous update capability is controlled by the load 1 (LD1) and load 0 (LD0) control bits. By setting load 1 = 1, all of the DAC registers will be updated on the falling edge of the 24th clock signal. When the new data has been entered into the device, all of the DAC outputs can be updated simultaneously and synchronously with the clock.

DAC8554 data updates are *synchronized* with the falling edge of the 24th SCLK cycle, which follows a falling edge of SYNC. For such *synchronous* updates, the LDAC pin is not required and it must be connected to GND permanently. The LDAC pin is used as a positive edge triggered timing signal for *asynchronous* DAC updates. Data buffers of all channels must be loaded with desired data before LDAC is triggered. After a low-to-high LDAC transition, all DACs are simultaneously updated with the contents of the corresponding data buffers. If the contents of a data buffer are not changed by the serial interface, the corresponding DAC output will remain unchanged after the LDAC trigger.

ENABLE PIN

For normal operation, the enable pin must be tied to a logic low. If the enable pin is tied high, the DAC8554 stops listening to the serial port. This feature can be useful for applications that share the same serial port.

MICROPROCESSOR INTERFACING

DAC8554 to 8051 Interface

See Figure 50 for a serial interface between the DAC8554 and a typical 8051-type microcontroller. The setup for the interface is as follows: TXD of the 8051 drives SCLK of the DAC8554, while RXD drives the serial data line of the device. The $\overline{SYNC}$ signal is derived from a bit-programmable pin on the port of the 8051. In this case, port line P3.3 is used. When data are to be transmitted to the DAC8554, P3.3 is taken LOW. The 8051 transmits data in 8-bit bytes; thus, only eight falling clock edges occur in the transmit cycle. To load data to the DAC, P3.3 is left LOW after the first eight bits are transmitted, then a second and third write cycle are initiated to transmit the remaining data. P3.3 is taken HIGH following the completion of the third write cycle. The 8051 outputs the serial data in a format that presents the LSB first, while the DAC8554 requires its data with the MSB as the first bit received. The 8051 transmit routine must therefore take this into account, and *mirror* the data as needed.

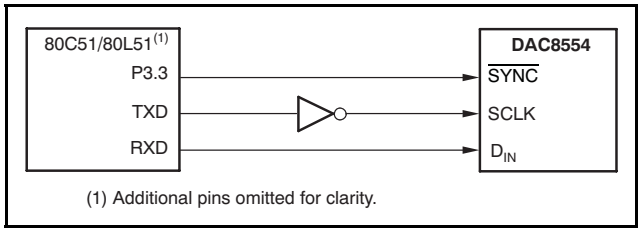

Figure 50. DAC8554 to 80C51/80L51 Interface

DAC8554 to Microwire Interface

Figure 51 shows an interface between the DAC8554 and any Microwire-compatible device. Serial data are shifted out on the falling edge of the serial clock and clocked into the DAC8554 on the rising edge of the SK signal.

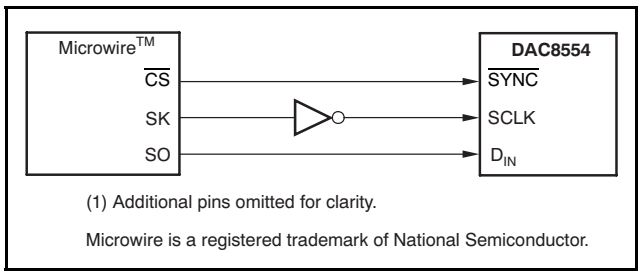

Figure 51. DAC8554 to Microwire Interface

DAC8554 to 68HC11 Interface

Figure 52 shows a serial interface between the DAC8554 and the 68HC11 microcontroller. SCK of the 68HC11 drives the SCLK of the DAC8554, while the MOSI output drives the serial data line of the DAC. The SYNC signal is derived from a port line (PC7), similar to the 8051 diagram.

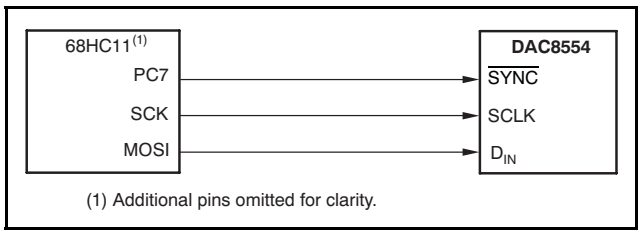

Figure 52. DAC8554 to 68HC11 Interface

The 68HC11 should be configured so that its CPOL bit is '0' and its CPHA bit is '1'. This configuration causes data appearing on the MOSI output to be valid on the falling edge of SCLK. When data are being transmitted to the DAC, the $\overline{SYNC}$ line is held LOW (PC7). Serial data from the 68HC11 are transmitted in 8-bit bytes with only eight falling clock edges occurring in the transmit cycle. (Data are transmitted MSB first.) In order to load data to the DAC8554, PC7 is left LOW after the first eight bits are transferred, then a second and third serial write operation are performed to the DAC. PC7 is taken HIGH at the end of this procedure.

DAC8554 to TMS320 DSP Interface

Figure 53 shows the connections between the DAC8554 and a TMS320 digital signal processor (DSP). A single DSP can control up to four DAC8554s without any interface logic.

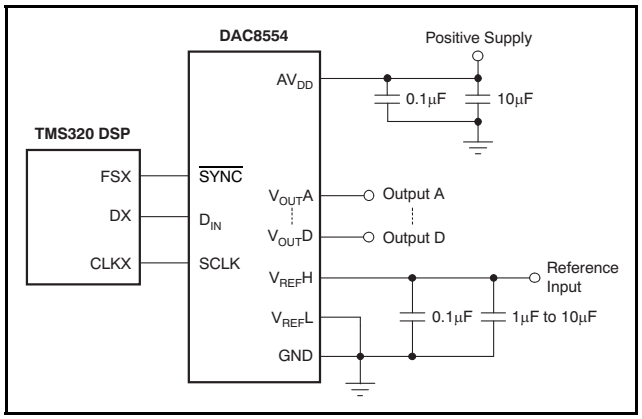

Figure 53. DAC8554 to TMS320 DSP

APPLICATION INFORMATION

CURRENT CONSUMPTION

The DAC8554 typically consumes a maximum of 208µA at AV_{DD} = 5V and 180µA at AV_{DD} = 3V for each active channel, including reference current consumption. Additional current consumption can occur at the digital inputs if V_{IH} << IOV_{DD}. For most efficient power operation, CMOS logic levels are recommended at the digital inputs to the DAC.

In power-down mode, typical current consumption is 175nA per channel. A delay time of 10ms to 20ms after a power-down command is issued to the DAC is typically sufficient for the power-down current to drop below 10µA.

DRIVING RESISTIVE AND CAPACITIVE LOADS

The DAC8554 output stage is capable of driving loads of up to 1000pF while remaining stable. Within the offset and gain error margins, the DAC8554 can operate rail-to-rail when driving a capacitive load. Resistive loads of 2kΩ can be driven by the DAC8554 while achieving good load regulation. When the outputs of the DAC are driven to the positive rail under resistive loading, the PMOS transistor of each Class-AB output stage can enter into the linear region. When this scenario occurs, the added IR voltage drop deteriorates the linearity performance of the DAC. This deterioration only occurs within approximately the top 100mV of the DAC output voltage characteristic. Under resistive loading conditions, good linearity is preserved as long as the output voltage is at least 100mV below the AV_{DD} voltage.

CROSSTALK AND AC PERFORMANCE

The DAC8554 architecture uses separate resistor strings for each DAC channel in order to achieve ultra-low crosstalk performance. dc crosstalk seen at one channel during a full-scale change on the neighboring channel is typically less than 0.5LSBs. The ac crosstalk measured (for a full-scale, 1kHz sine wave output generated at one channel, and measured at the remaining output channel) is typically under –100dB.

In addition, the DAC8554 can achieve typical ac performance of 96dB signal-to-noise ratio (SNR) and 85dB total harmonic distortion (THD), making the DAC8554 a solid choice for applications requiring high SNR at output frequencies at or below 10kHz.

OUTPUT VOLTAGE STABILITY

The DAC8554 exhibits excellent temperature stability of 5ppm/°C typical output voltage drift over the specified temperature range of the device. This stability enables the output voltage of each channel to stay within a ±25µV window for a ±1°C ambient temperature change.

Good power-supply rejection ratio (PSRR) performance reduces supply noise present on AV_{DD} from appearing at the outputs to well below 10µV-s. Combined with good dc noise performance and true 16-bit differential linearity, the DAC8554 becomes a perfect choice for closed-loop control applications.

SETTLING TIME AND OUTPUT GLITCH PERFORMANCE

The DAC8554 settles to ±0.003% of its full-scale range within 10µs, driving a 200pF 2kΩ load. For good settling performance, the outputs should not approach the top and bottom rails. Small signal settling time is under 1µs, enabling data update rates exceeding 1MSPS for small code changes.

Many applications are sensitive to undesired transient signals such as glitch. The DAC8554 has a proprietary, ultra-low glitch architecture addressing such applications. Code-to-code glitches rarely exceed 1mV and they last under 0.3µs. Typical glitch energy is an outstanding 0.15nV-s. Theoretical worst-case glitch should occur during a 256LSB step, but it is so low, it cannot be detected.

DIFFERENTIAL AND INTEGRAL NONLINEARITY

The DAC8554 uses precision thin film resistors to achieve monotonicity and good linearity. Typical linearity error is ±4LSBs, with a ±0.3mV error for a 5V range. Differential linearity is typically ±0.25LSBs, with a ±19µV error for a consecutive code change.

USING THE REF02 AS A POWER SUPPLY FOR THE DAC8554

Due to the extremely low supply current required by the DAC8554, a possible configuration is to use a REF02 (+5V precision voltage reference) to supply the required voltage to the DAC8554 supply input as well as the reference input, as illustrated in Figure 54. This is especially useful if the power supply is quite noisy or if the system supply voltages are at some value other than 5V. The REF02 will output a steady supply voltage for the DAC8554. If the REF02 is used, the current it needs to supply to the DAC8554 is 0.85mA typical for AV_{DD} = 5V. When a DAC output is loaded, the REF02 also needs to supply the current to the load. The total typical current required (with a 5kΩ load on a given DAC output) is:

0.85mA + (5V/5kΩ) = 1.085mA

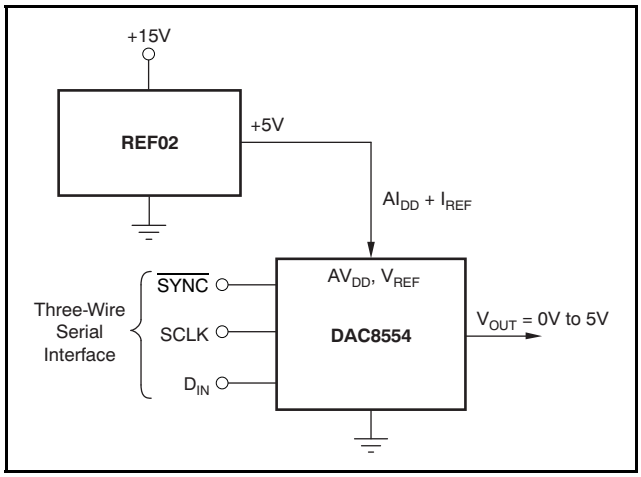

Figure 54. REF02 as a Power Supply to the DAC8554

BIPOLAR OPERATION USING THE DAC8554

The DAC8554 has been designed for single-supply operation, but a bipolar output range is also possible using the circuit in Figure 55. The circuit shown will give an output voltage range of $\pm V_{REF}$. Rail-to-rail operation at the amplifier output is achievable using an amplifier such as the OPA703, as shown in Figure 55.

The output voltage for any input code can be calculated as follows:

$$V_{OUT}X = \left[V_{REF} \times \left(\frac{D}{65536}\right) \times \left(\frac{R_1 + R_2}{R_1}\right) - V_{REF} \times \left(\frac{R_2}{R_1}\right) \right]$$

where D represents the input code in decimal (0–65535).

With V_{REF} = 5V, $R_1 = R_2$ = 10kΩ.

$$V_{OUT}X = \left(\frac{10 \times D}{65536}\right) - 5V$$

Using this example, an output voltage range of ±5V with 0000h corresponding to a –5V output and FFFFh corresponding to a 5V output can be achieved. Similarly, using V_{REF} = 2.5V, a ±2.5V output voltage range can be achieved.

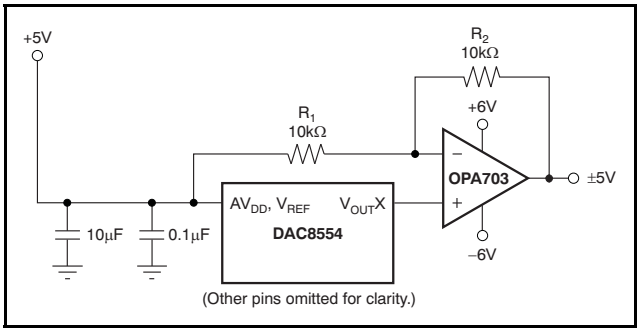

Figure 55. Bipolar Operation With the DAC8554

LAYOUT

A precision analog component requires careful layout, adequate bypassing, and clean, well-regulated power supplies.

The DAC8554 offers single-supply operation, and it will often be used in close proximity with digital logic, microcontrollers, microprocessors, and digital signal processors. The more digital logic present in the design and the higher the switching speed, the more difficult it is to keep digital noise from appearing at the output.

Due to the single ground pin of the DAC8554, all return currents, including digital and analog return currents for the DAC, must flow through a single point. Ideally, GND would be connected directly to an analog ground plane. This plane would be separate from the ground connection for the digital components until they were connected at the power-entry point of the system.

The power applied to AV_{DD} should be well-regulated and low-noise. Switching power supplies and dc/dc converters often have high-frequency glitches or spikes riding on the output voltage. In addition, digital components can create similar high-frequency spikes. This noise can easily couple into the DAC output voltage through various paths between the power connections and analog output.

As with the GND connection, AV_{DD} should be connected to a positive power-supply plane or trace that is separate from the connection for digital logic until they are connected at the power-entry point. In addition, a 1µF to 10µF capacitor in parallel with a 0.1µF bypass capacitor is strongly recommended. In some situations, additional bypassing may be required, such as a 100µF electrolytic capacitor or even a *Pi* filter made up of inductors and capacitors—all designed to essentially low-pass filter the supply, removing the high-frequency noise.

Up to four DAC8554 devices can be used on a single SPI bus without any glue logic to create a high channel count solution. Special attention is required to avoid digital signal integrity problems when using multiple DAC8554s on the same SPI bus. Signal integrity of $\overline{SYNC}$, SCLK, and D_{IN} lines will not be an issue as long as the rise times of these digital signals are longer than six times the propagation delay between any two DAC8554 devices. Propagation speed is approximately six inches/ns on standard printed circuit boards (PCBs). Therefore, if the digital signal rise time is 1ns, the distance between any two DAC8554s has to be further apart on the PCB, and the signal rise times should be reduced by placing series resistors at the drivers for $\overline{SYNC}$, SCLK, and D_{IN} lines. If the largest distance between any two DAC8554s must be six inches, the rise time should be reduced to 6ns with an RC network formed by the series resistor at the digital driver and the total trace and input capacitance on the PCB.

PACKAGING INFORMATION

Orderable Device	Status (1)	Package Type	Package Drawing	Pins	Package Qty	Eco Plan (2)	Lead finish/ Ball material (6)	MSL Peak Temp (3)	Op Temp (°C)	Device Marking (4/5)	Samples
DAC8554IPW	ACTIVE	TSSOP	PW	16	90	RoHS & Green	NIPDAU	Level-1-260C-UNLIM	-40 to 105	D8554	Samples
DAC8554IPWG4	ACTIVE	TSSOP	PW	16	90	RoHS & Green	NIPDAU	Level-1-260C-UNLIM	-40 to 105	D8554	Samples
DAC8554IPWR	ACTIVE	TSSOP	PW	16	2000	RoHS & Green	NIPDAU	Level-1-260C-UNLIM	-40 to 105	D8554	Samples

(1) The marketing status values are defined as follows:
ACTIVE: Product device recommended for new designs.
LIFEBUY: TI has announced that the device will be discontinued, and a lifetime-buy period is in effect.
NRND: Not recommended for new designs. Device is in production to support existing customers, but TI does not recommend using this part in a new design.
PREVIEW: Device has been announced but is not in production. Samples may or may not be available.
OBSOLETE: TI has discontinued the production of the device.

(2) **RoHS:** TI defines "RoHS" to mean semiconductor products that are compliant with the current EU RoHS requirements for all 10 RoHS substances, including the requirement that RoHS substance do not exceed 0.1% by weight in homogeneous materials. Where designed to be soldered at high temperatures, "RoHS" products are suitable for use in specified lead-free processes. TI may reference these types of products as "Pb-Free".
RoHS Exempt: TI defines "RoHS Exempt" to mean products that contain lead but are compliant with EU RoHS pursuant to a specific EU RoHS exemption.
Green: TI defines "Green" to mean the content of Chlorine (Cl) and Bromine (Br) based flame retardants meet JS709B low halogen requirements of <=1000ppm threshold. Antimony trioxide based flame retardants must also meet the <=1000ppm threshold requirement.

(3) MSL, Peak Temp. - The Moisture Sensitivity Level rating according to the JEDEC industry standard classifications, and peak solder temperature.

(4) There may be additional marking, which relates to the logo, the lot trace code information, or the environmental category on the device.

(5) Multiple Device Markings will be inside parentheses. Only one Device Marking contained in parentheses and separated by a "~" will appear on a device. If a line is indented then it is a continuation of the previous line and the two combined represent the entire Device Marking for that device.

(6) Lead finish/Ball material - Orderable Devices may have multiple material finish options. Finish options are separated by a vertical ruled line. Lead finish/Ball material values may wrap to two lines if the finish value exceeds the maximum column width.

Important Information and Disclaimer: The information provided on this page represents TI's knowledge and belief as of the date that it is provided. TI bases its knowledge and belief on information provided by third parties, and makes no representation or warranty as to the accuracy of such information. Efforts are underway to better integrate information from third parties. TI has taken and continues to take reasonable steps to provide representative and accurate information but may not have conducted destructive testing or chemical analysis on incoming materials and chemicals. TI and TI suppliers consider certain information to be proprietary, and thus CAS numbers and other limited information may not be available for release.

In no event shall TI's liability arising out of such information exceed the total purchase price of the TI part(s) at issue in this document sold by TI to Customer on an annual basis.

TAPE AND REEL INFORMATION

REEL DIMENSIONS

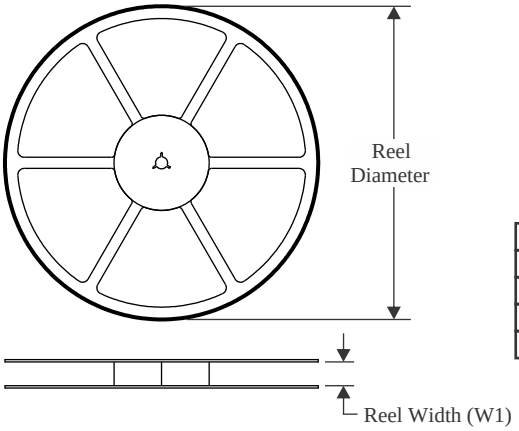

TAPE DIMENSIONS

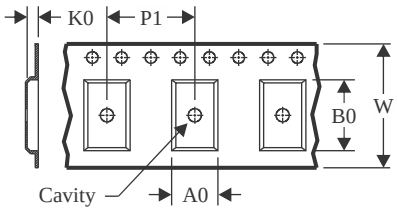

A0	Dimension designed to accommodate the component width
B0	Dimension designed to accommodate the component length
K0	Dimension designed to accommodate the component thickness
W	Overall width of the carrier tape
P1	Pitch between successive cavity centers

QUADRANT ASSIGNMENTS FOR PIN 1 ORIENTATION IN TAPE

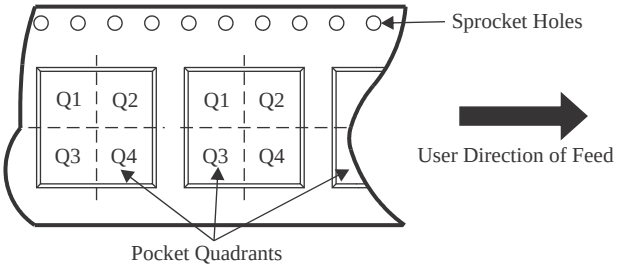

*All dimensions are nominal

Device	Package Type	Package Drawing	Pins	SPQ	Reel Diameter (mm)	Reel Width W1 (mm)	A0 (mm)	B0 (mm)	K0 (mm)	P1 (mm)	W (mm)	Pin1 Quadrant
DAC8554IPWR	TSSOP	PW	16	2000	330.0	12.4	6.9	5.6	1.6	8.0	12.0	Q1

TAPE AND REEL BOX DIMENSIONS

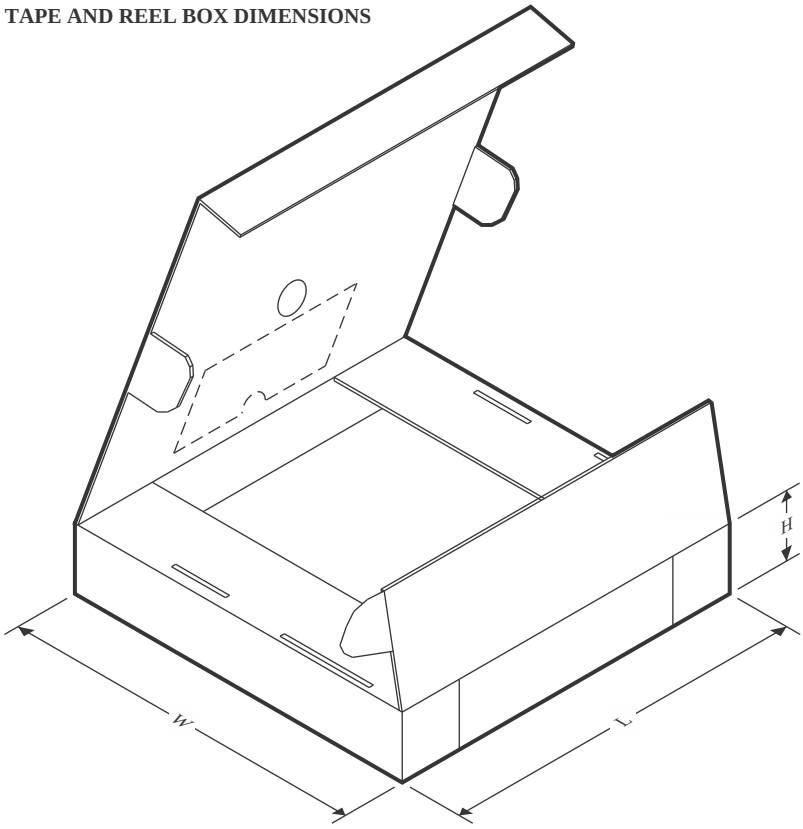

*All dimensions are nominal

Device	Package Type	Package Drawing	Pins	SPQ	Length (mm)	Width (mm)	Height (mm)
DAC8554IPWR	TSSOP	PW	16	2000	350.0	350.0	43.0

TUBE

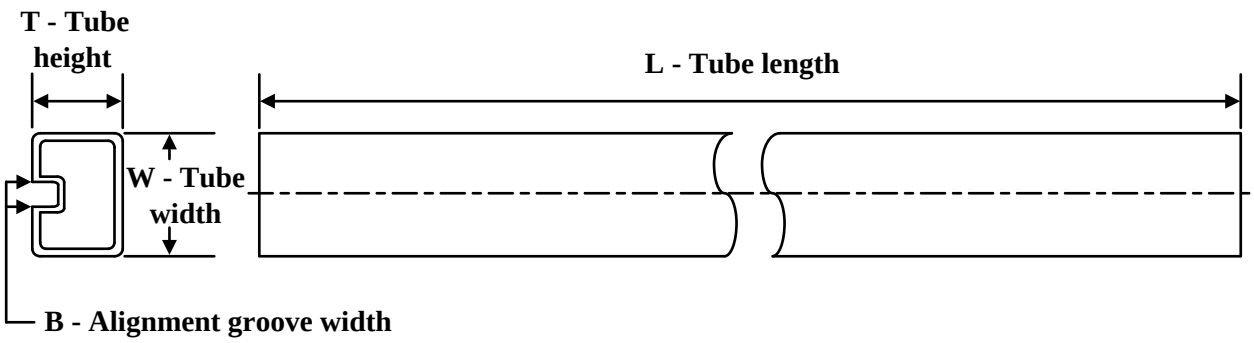

*All dimensions are nominal

Device	Package Name	Package Type	Pins	SPQ	L (mm)	W (mm)	T (µm)	B (mm)
DAC8554IPW	PW	TSSOP	16	90	530	10.2	3600	3.5
DAC8554IPWG4	PW	TSSOP	16	90	530	10.2	3600	3.5

PW0016A

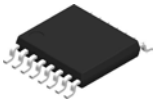

PACKAGE OUTLINE

TSSOP - 1.2 mm max height

SMALL OUTLINE PACKAGE

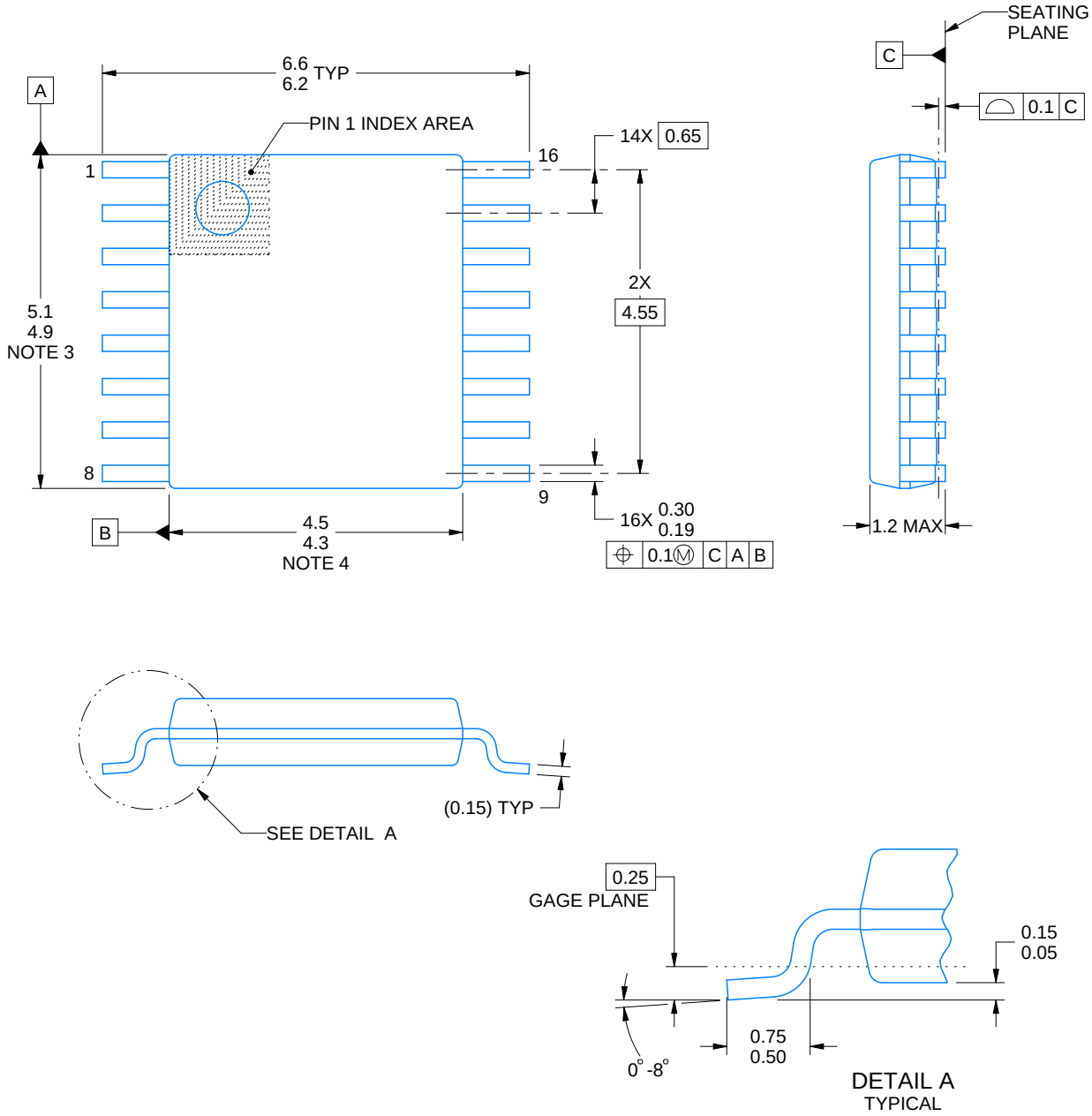

NOTES:

1. All linear dimensions are in millimeters. Any dimensions in parenthesis are for reference only. Dimensioning and tolerancing per ASME Y14.5M.
2. This drawing is subject to change without notice.
3. This dimension does not include mold flash, protrusions, or gate burrs. Mold flash, protrusions, or gate burrs shall not exceed 0.15 mm per side.
4. This dimension does not include interlead flash. Interlead flash shall not exceed 0.25 mm per side.
5. Reference JEDEC registration MO-153.

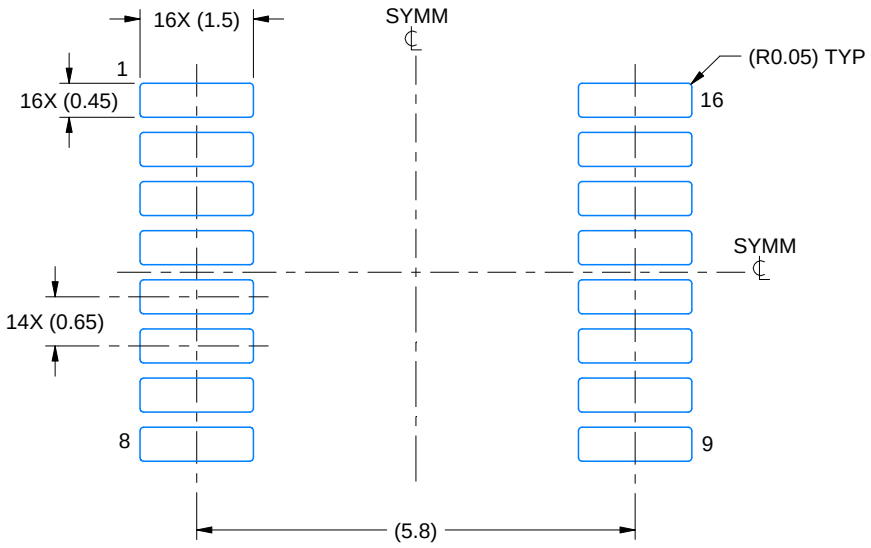

LAND PATTERN EXAMPLE
EXPOSED METAL SHOWN
SCALE: 10X

NON-SOLDER MASK DEFINED (PREFERRED)

SOLDER MASK DEFINED

SOLDER MASK DETAILS

4220204/A 02/2017

NOTES: (continued)

6. Publication IPC-7351 may have alternate designs.
7. Solder mask tolerances between and around signal pads can vary based on board fabrication site.

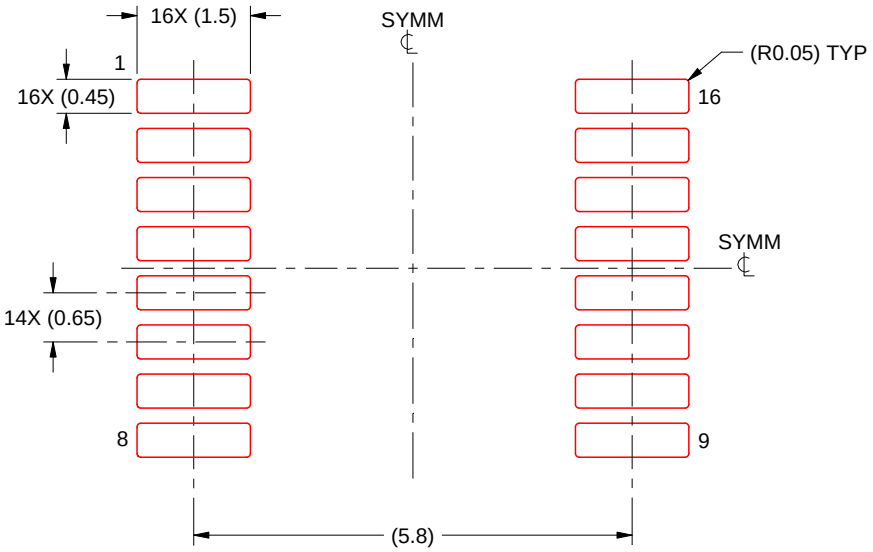

SOLDER PASTE EXAMPLE
BASED ON 0.125 mm THICK STENCIL
SCALE: 10X

4220204/A 02/2017

NOTES: (continued)

8. Laser cutting apertures with trapezoidal walls and rounded corners may offer better paste release. IPC-7525 may have alternate design recommendations.
9. Board assembly site may have different recommendations for stencil design.

IMPORTANT NOTICE AND DISCLAIMER

TI PROVIDES TECHNICAL AND RELIABILITY DATA (INCLUDING DATA SHEETS), DESIGN RESOURCES (INCLUDING REFERENCE DESIGNS), APPLICATION OR OTHER DESIGN ADVICE, WEB TOOLS, SAFETY INFORMATION, AND OTHER RESOURCES “AS IS” AND WITH ALL FAULTS, AND DISCLAIMS ALL WARRANTIES, EXPRESS AND IMPLIED, INCLUDING WITHOUT LIMITATION ANY IMPLIED WARRANTIES OF MERCHANTABILITY, FITNESS FOR A PARTICULAR PURPOSE OR NON-INFRINGEMENT OF THIRD PARTY INTELLECTUAL PROPERTY RIGHTS.

These resources are intended for skilled developers designing with TI products. You are solely responsible for (1) selecting the appropriate TI products for your application, (2) designing, validating and testing your application, and (3) ensuring your application meets applicable standards, and any other safety, security, regulatory or other requirements.

These resources are subject to change without notice. TI grants you permission to use these resources only for development of an application that uses the TI products described in the resource. Other reproduction and display of these resources is prohibited. No license is granted to any other TI intellectual property right or to any third party intellectual property right. TI disclaims responsibility for, and you will fully indemnify TI and its representatives against, any claims, damages, costs, losses, and liabilities arising out of your use of these resources.

TI’s products are provided subject to TI’s Terms of Sale or other applicable terms available either on ti.com or provided in conjunction with such TI products. TI’s provision of these resources does not expand or otherwise alter TI’s applicable warranties or warranty disclaimers for TI products.

TI objects to and rejects any additional or different terms you may have proposed.

Mailing Address: Texas Instruments, Post Office Box 655303, Dallas, Texas 75265
Copyright © 2023, Texas Instruments Incorporated

Looking for pricing, stock, or lifecycle information?

Click below to explore more details on WIN SOURCE:

- View DAC8554IPWR on WIN SOURCE
- Texas Instruments Information

Optimize Your Supply Chain with WIN SOURCE Solutions

- Global Sourcing Solution
- Obsolete Management
- Cost Control Management
- Shortage Management
- Alternative Solution
- Excess Inventory Management