THE DATASHEET OF

SML-LXFM0603USBCTR

www.win-source.net 0086-755-83957316

PART NUMBER	SML-LXFM0603USBCTR	REV	D

REV	E.C.N. NUMBER AND REVISION COMMENTS	DATE
A	E.C.N. #10967.	03.14.03
B	E.C.N. #11148.	03.01.05
C	E.C.N. #11304.	01.26.06
D	ECN-Lumex201700098	10.30.17

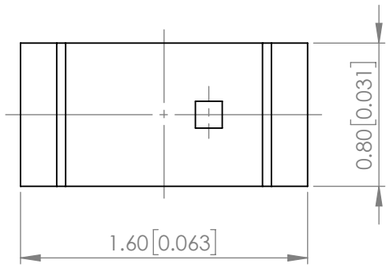

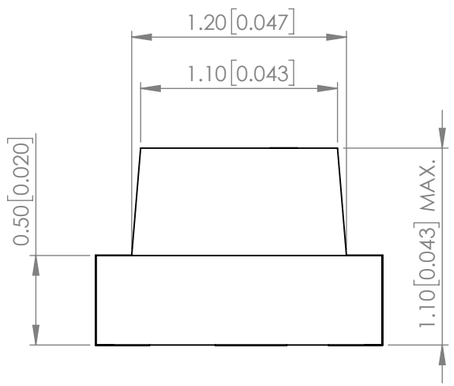

POLARITY

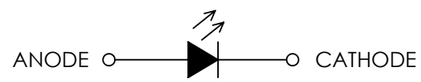

RECOMMENDED SOLDER PAD LAYOUT

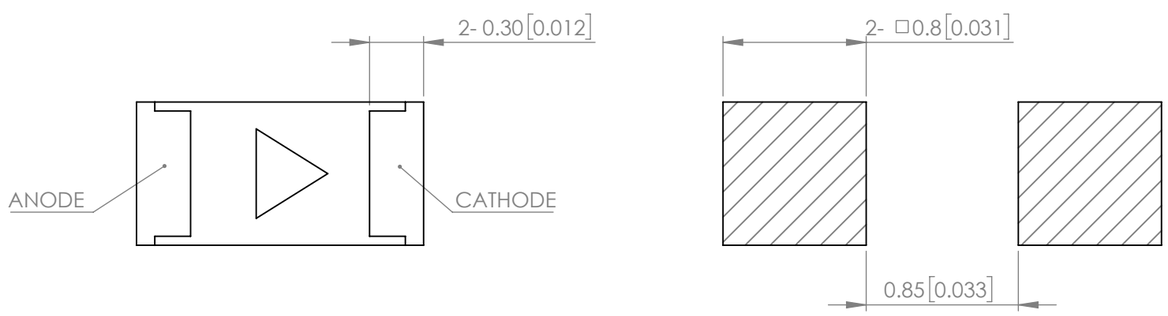

ELECTRO-OPTICAL CHARACTERISTIC TA=25℃

PARAMETER	MIN	TYP	MAX	UNITS	TEST COND
PEAK WAVELENGTH	-	460	-	nm	If=20mA
FORWARD VOLTAGE	-	3.3	4.0	Vf	If=20mA
REVERSE VOLTAGE	-	-	50	uA	V_R=5V
LUMINOUS INTENSITY	-	100	-	mcd	If=20mA
VIEWING ANGLE	-	130	-	2x theta1/2	-
EMITTED COLOR	BLUE				
EPOXY LENS FINISH	WATER CLEAR				

ABSOLUTE MAXIMUM RATINGS TA=25℃

PARAMETER	MAX	UNITS
PEAK FORWARD CURRENT*	150	mA
FORWARD CURRENT	30	mA
REVERSE VOLTAGE	5	V
POWER DISSIPATION	120	mW
STORAGE TEMPERATURE	-40 TO +85	℃
OPERATING TEMPERATURE	-40 TO +85	℃

***t<10us**

NOTE:
1. RoHS COMPLIANT.
2. PACKAGE : 2000 PCS / REEL.
3. THE CATHODE IS ORIENTED TOWARDS THE TAPE SPROCKET HOLE.

STATIC DEVICE FOLLOW PROPER E.S.D. HANDLING PROCEDURES WHEN WORKING WITH THIS PART

MOISTURE SENSITIVE DEVICE
PER JEDEC LEVEL 3 STANDARDS

*UNLESS OTHERWISE SPECIFIED TOLERANCES PER DECIMAL PRECISION ARE: X=±1 (±0.039), X.X=±0.5 (±0.020), X.XX=±0.25 (±0.010), X.XXX=±0.127 (±0.005). LEAD SIZE=±0.05 (±0.002), LEAD LENGTH=±0.75 (±0.030). MIN= +DECIMAL PRECISION -0.00 MAX.= +0.00 -DECIMAL PRECISION

LUMEX® Creating LED and LCD Solutions Together™
425 N. GARY AVE.
CAROL STREAM, IL 60188
PHONE : 800-278-5666
FAX : 630-315-2150
WEB : WWW.LUMEX.COM

1.6(L)*0.8(W)*1.1(H)mm, SURFACE MOUNT LED, 460nm ULTRA SUPER BLUE LED, WATER CLEAR LENS, TAPE AND REEL.

****THE SPECIFICATIONS MAY CHANGE AT ANY TIME WITHOUT NOTICE DUE TO NEW MATERIALS OR PRODUCT IMPROVEMENT.****

CONFIDENTIAL INFORMATION
THE INFORMATION CONTAINED IN THIS DOCUMENT IS THE PROPERTY OF LUMEX INC. EXCEPT AS SPECIFICALLY AUTHORIZED IN WRITING BY LUMEX INC., THE HOLDER OF THIS DOCUMENT SHALL KEEP ALL INFORMATION CONTAINED HEREIN CONFIDENTIAL AND SHALL PROTECT SAME IN WHOLE OR IN PART FROM DISCLOSURE AND DISSEMINATION TO ALL THIRD PARTIES.

DATE : 2017.10.30	DRAWN BY : C.C.
PAGE : 1 OF 2	CHKD BY : G.Y.
SCALE : NTF	APRVD BY : E.C.
UNIT : mm [INCH]	Pb

PART NUMBER	SML-LXFM0603USBCTR	REV	D

PROFILE

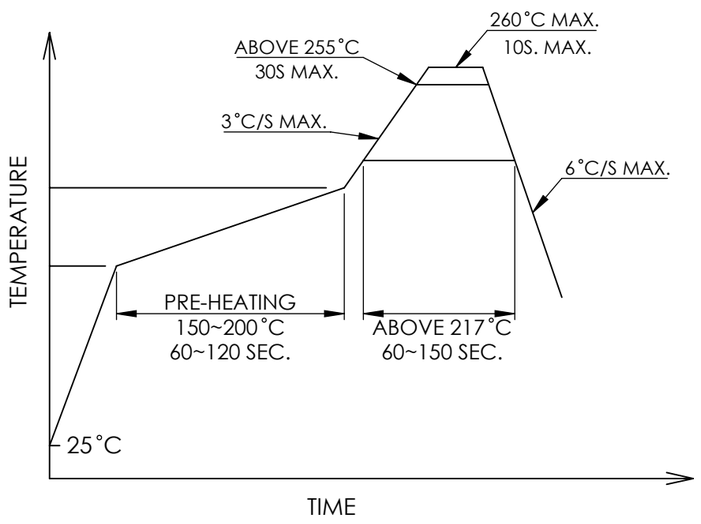

CARRIER TAPE DIMENSION

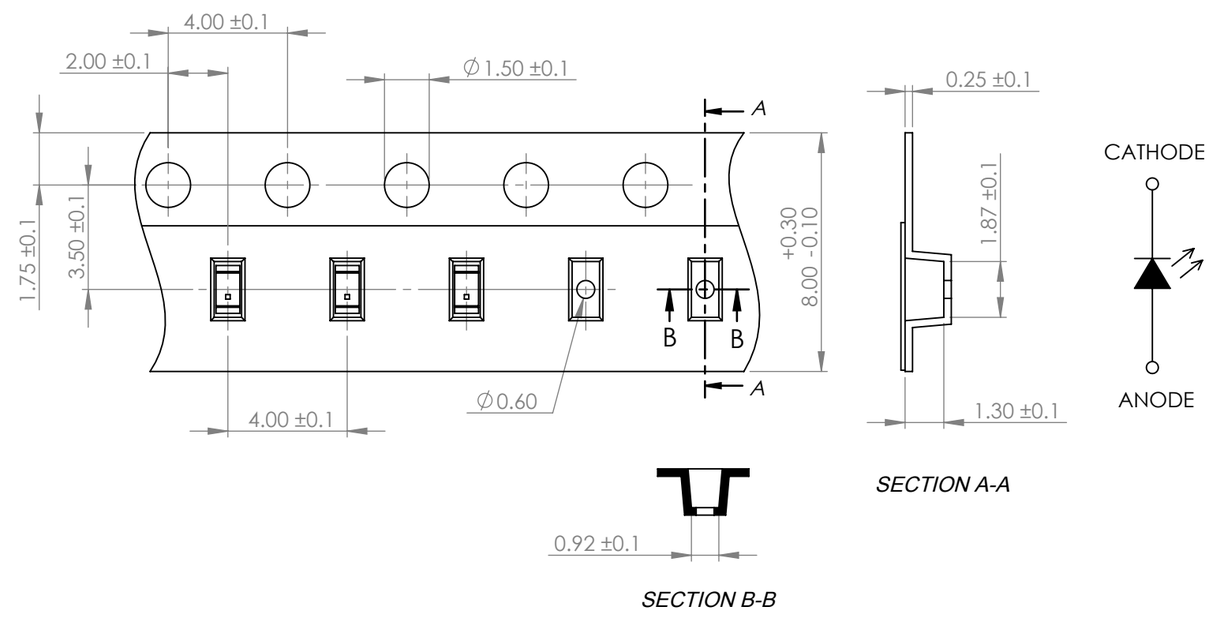

*UNLESS OTHERWISE SPECIFIED TOLERANCES PER DECIMAL PRECISION ARE: X=±1 (±0.039), X.X=±0.5 (±0.020), X.XX=±0.25 (±0.010), X.XXX=±0.127 (±0.005). LEAD SIZE=±0.05 (±0.002), LEAD LENGTH=±0.75 (±0.030). MIN= +DECIMAL PRECISION -0.00 MAX.= +0.00 -DECIMAL PRECISION

LUMEX® Creating LED and LCD Solutions Together™

425 N. GARY AVE.
CAROL STREAM, IL 60188
PHONE : 800-278-5666
FAX : 630-315-2150
WEB : WWW.LUMEX.COM

1.6(L)*0.8(W)*1.1(H)mm, SURFACE MOUNT LED, 460nm ULTRA SUPER BLUE LED, WATER CLEAR LENS, TAPE AND REEL.

****THE SPECIFICATIONS MAY CHANGE AT ANY TIME WITHOUT NOTICE DUE TO NEW MATERIALS OR PRODUCT IMPROVEMENT.****

CONFIDENTIAL INFORMATION
THE INFORMATION CONTAINED IN THIS DOCUMENT IS THE PROPERTY OF LUMEX INC. EXCEPT AS SPECIFICALLY AUTHORIZED IN WRITING BY LUMEX INC., THE HOLDER OF THIS DOCUMENT SHALL KEEP ALL INFORMATION CONTAINED HEREIN CONFIDENTIAL AND SHALL PROTECT SAME IN WHOLE OR IN PART FROM DISCLOSURE AND DISSEMINATION TO ALL THIRD PARTIES.

DATE : 2017.10.30	DRAWN BY : C.C.
PAGE : 2 OF 2	CHKD BY : G.Y.
SCALE : NTF	APRVD BY : E.C.
UNIT : mm [INCH]	Pb

Looking for pricing, stock, or lifecycle information?

Click below to explore more details on WIN SOURCE:

- View SML-LXFM0603USBCTR on WIN SOURCE
- Lumex Opto/Components Inc. Information

Optimize Your Supply Chain with WIN SOURCE Solutions

- Global Sourcing Solution
- Obsolete Management
- Cost Control Management
- Shortage Management
- Alternative Solution
- Excess Inventory Management