# THE DATASHEET OF

# SSF-LXH2100GD

www.win-source.net 0086-755-83957316

UNCONTROLLED DOCUMENT

| PART NUMBER | REV. |
|---|---|
| SSF-LXH2100GD(-1) | |

| REV. | E.C.N. NUMBER AND REVISION COMMENTS | DATE |
|---|---|---|

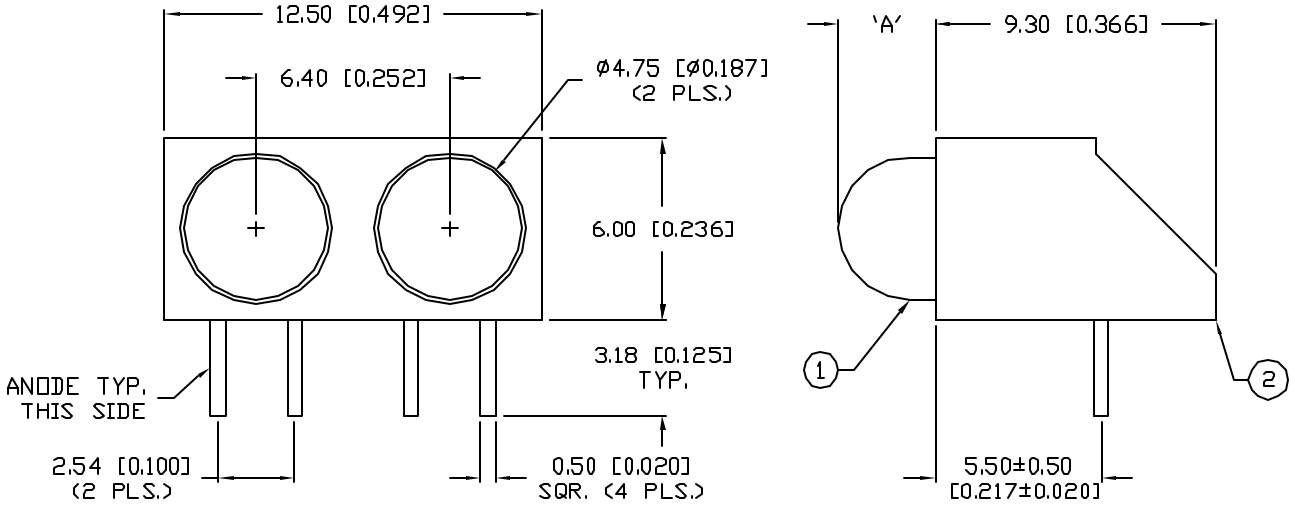


| DIM 'A' |
|---|
| NO P/N SUFFIX: 3.2 [0.126] |
| WITH -1 SUFFIX: 4.7 [0.187] |

NOTES:

1. NO P/N SUFFIX, SSL-LX507F3GD, GREEN LED. (2 PCS.)
   WITH -1 SUFFIX, SSL-LX509F3GD, GREEN LED. (2 PCS.)
2. SSH-LXH2100, BLACK HOLDER.

ELECTRO-OPTICAL CHARACTERISTICS $T_A$=25°C $I_f$=20mA

| PARAMETER | MIN | TYP | MAX | UNITS | TEST COND |
|---|---|---|---|---|---|
| PEAK WAVELENGTH | | 565 | | nm | |
| FORWARD VOLTAGE | | 2.2 | 2.6 | $V_f$ | |
| REVERSE VOLTAGE | 5.0 | | | $V_r$ | $I_r$=100µA |
| AXIAL INTENSITY | | 30 | | mcd | $I_f$=20mA |
| VIEWING ANGLE | | 60 | | 2x theta | |
| EMITTED COLOR: | GREEN | | | | |
| EPOXY LENS FINISH: | GREEN DIFFUSED | | | | |

LIMITS OF SAFE OPERATION AT 25°C

| PARAMETER | MAX | UNITS |
|---|---|---|
| PEAK FORWARD CURRENT* | 150 | mA |
| STEADY CURRENT | 25 | mA |
| POWER DISSIPATION | 105 | mW |
| DERATE FROM 25°C | -1.2 | mW/°C |
| OPERATING, STORAGE TEMP. | -40 TO +85 | °C |
| SOLDERING TEMP. | +260 | °C |
| 2.0mm FROM BODY | | 3 SEC. MAX |

* t<10µS

UNCONTROLLED DOCUMENT

*UNLESS OTHERWISE SPECIFIED TOLERANCE IS ±0.25mm (±0.010")

| REV. | PART NUMBER |
|---|---|
| | SSF-LXH2100GD(-1) |

T-5mm (T-1 3/4) DUAL LED HOLDER,
TWO 565nm GREEN LEDS, GREEN DIFFUSED LENS.

CONFIDENTIAL INFORMATION
THE INFORMATION CONTAINED IN THIS DOCUMENT IS THE PROPERTY OF LUMEX INC. EXCEPT AS SPECIFICALLY AUTHORIZED IN WRITING BY LUMEX INC., THE HOLDER OF THIS DOCUMENT SHALL KEEP ALL INFORMATION CONTAINED HEREIN CONFIDENTIAL AND SHALL PROTECT SAME IN WHOLE OR IN PART FROM DISCLOSURE AND DISSEMINATION TO ALL THIRD PARTIES.

RELIABILITY NOTE
OUR MANY YEARS OF EXPERIENCE DATA ACCUMULATION INDICATE THAT SOLDER HEAT IS A MAJOR CAUSE OF EARLY AND FUTURE FAILURE. PLEASE PAY ATTENTION TO YOUR SOLDERING PROCESS.

LUMEX INCORPORATED
290 E. HELLEN ROAD
PALATINE, ILLINOIS 60067
PHONE: 1-847-359-2790
WEB: HTTP://WWW.LUMEX.COM

| DRAWN BY: | CHECKED BY: | APPROVED BY: | DATE: 9-15-99 |
|---|---|---|---|
| BC | | | PAGE: 1 OF 1 |
| | | | SCALE: N/A |

## Looking for pricing, stock, or lifecycle information?

Click below to explore more details on WIN SOURCE:

- View SSF-LXH2100GD on WIN SOURCE
- Lumex Opto/Components Inc. Information

## Optimize Your Supply Chain with WIN SOURCE Solutions

- Global Sourcing Solution
- Obsolete Management
- Cost Control Management
- Shortage Management
- Alternative Solution
- Excess Inventory Management