THE DATASHEET OF

SSA-LXH1025SUGD

www.win-source.net 0086-755-83957316

UNCONTROLLED DOCUMENT

PART NUMBER

SSA–LXH1025SUGD

REV.

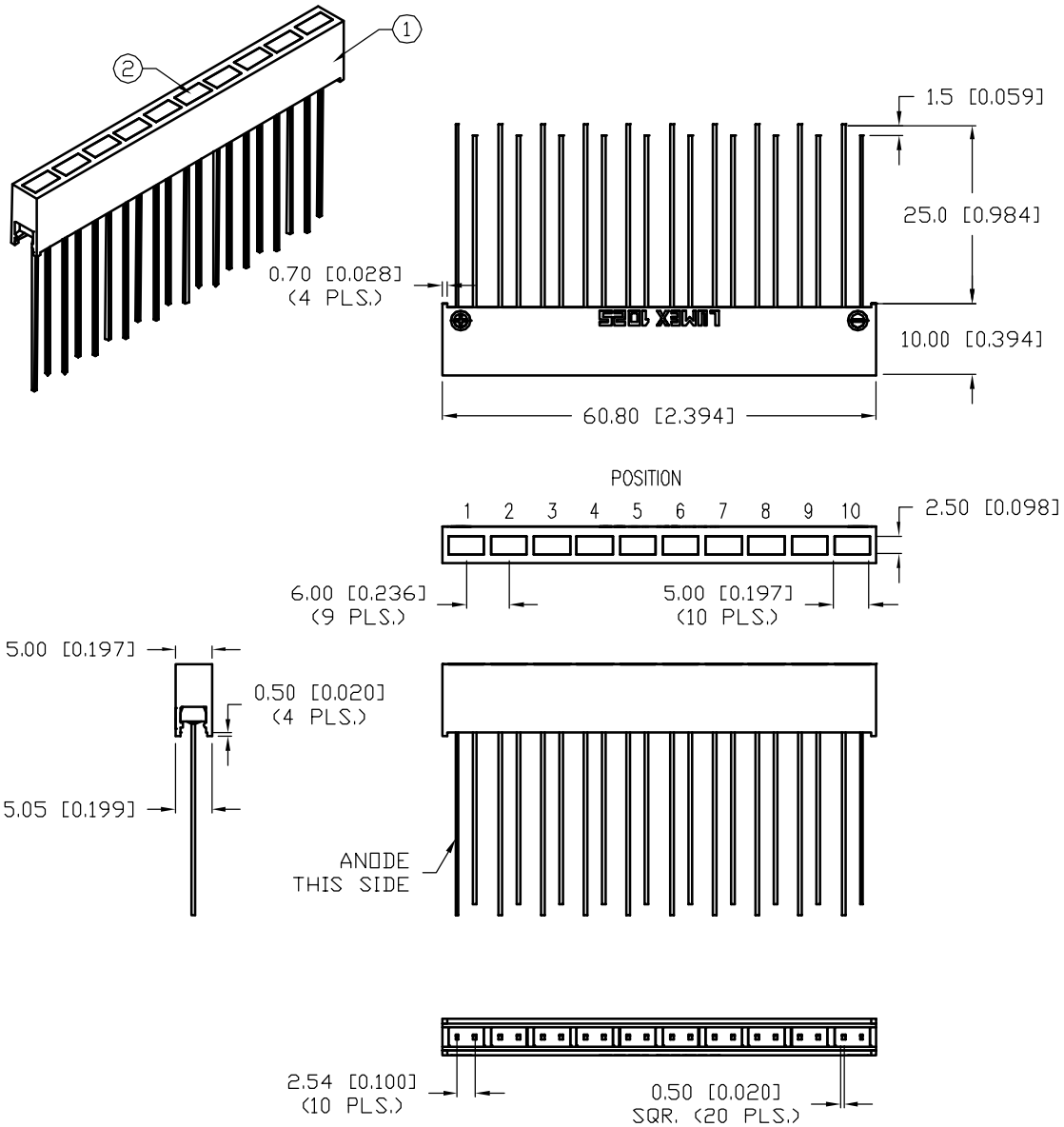

ELECTRO–OPTICAL CHARACTERISTICS T_A=25°C I_f= 20mA

PARAMETER	MIN	TYP	MAX	UNITS	TEST COND
PEAK WAVELENGTH		574		nm	
FORWARD VOLTAGE		2.2	2.6	V_f	
REVERSE VOLTAGE	5.0			V_r	I_r=100μA
AXIAL INTENSITY		50		mcd	I_f = 20mA
VIEWING ANGLE		110		2x theta	
EMITTED COLOR:	GREEN				
EPOXY LENS FINISH:	GREEN DIFFUSED				

LIMITS OF SAFE OPERATION AT 25°C PER DIE

PARAMETER	MAX	UNITS
PEAK FORWARD CURRENT*	150	mA
STEADY CURRENT	25	mA
POWER DISSIPATION	105	mW
DERATE FROM 25°C	–1.2	mW/°C
OPERATING, STORAGE TEMP.	–40 TO +85	°C
SOLDERING TEMP.	+260	°C
2.0mm FROM BODY		3 SEC. MAX

* t<10μS

NOTES:

1. SSH–LXH1025 HOLDER. MATERIAL: BLACK NYLON, UL V94–0.
2. SSL–LX2558JSUGD, LED. (10 PCS.)
3. SORT LEDS FOR MATCHED INTENSITY.

UNCONTROLLED DOCUMENT

*UNLESS OTHERWISE SPECIFIED TOLERANCES PER DECIMAL PRECISION ARE: X=±1 (±0.039), X.X=±0.5 (±0.020), X.XX=±0.25 (±0.010), X.XXX=±0.127 (±0.005). LEAD SIZE=±0.05 (±0.002), LEAD LENGTH=±0.75 (±0.030). MIN= +DECIMAL PRECISION –0.00 MAX.= +0.00 –DECIMAL PRECISION

REV.

PART NUMBER

SSA–LXH1025SUGD

2.5mm x 5mm 10 LED RECTANGULAR ARRAY,

574nm AlInGaP GREEN LEDS, GREEN DIFFUSED LENS.

CONFIDENTIAL INFORMATION

THE INFORMATION CONTAINED IN THIS DOCUMENT IS THE PROPERTY OF LUMEX INC. EXCEPT AS SPECIFICALLY AUTHORIZED IN WRITING BY LUMEX INC., THE HOLDER OF THIS DOCUMENT SHALL KEEP ALL INFORMATION CONTAINED HEREIN CONFIDENTIAL AND SHALL PROTECT SAME IN WHOLE OR IN PART FROM DISCLOSURE AND DISSEMINATION TO ALL THIRD PARTIES.

RELIABILITY NOTE

OUR MANY YEARS OF EXPERIENCE DATA ACCUMULATION INDICATE THAT SOLDER HEAT IS A MAJOR CAUSE OF EARLY AND FUTURE FAILURE. PLEASE PAY ATTENTION TO YOUR SOLDERING PROCESS.

LUMEX INC. We Tame Photons To Work For You

290 E. HELEN ROAD
PALATINE, IL 60067–6976
PHONE: +1.847.359.2790
US WEB: www.lumex.com
TW WEB: www.lumex.com.tw

DRAWN BY:	CHECKED BY:	APPROVED BY:	DATE: 5.15.03
CT			PAGE: 1 OF 1
			SCALE: N/A

Looking for pricing, stock, or lifecycle information?

Click below to explore more details on WIN SOURCE:

- View SSA-LXH1025SUGD on WIN SOURCE
- Lumex Opto/Components Inc. Information

Optimize Your Supply Chain with WIN SOURCE Solutions

- Global Sourcing Solution
- Obsolete Management
- Cost Control Management
- Shortage Management
- Alternative Solution
- Excess Inventory Management