THE DATASHEET OF

SSI-LXR3816HGWB150

www.win-source.net 0086-755-83957316

PART NUMBER	SSI–LXR3816HGWB150	REV.	A
DATE	E.C.N. NUMBER AND REVISION COMMENTS		REV.
09.13.11	E.C.N. #10BRDR. & REDRAWN.		A

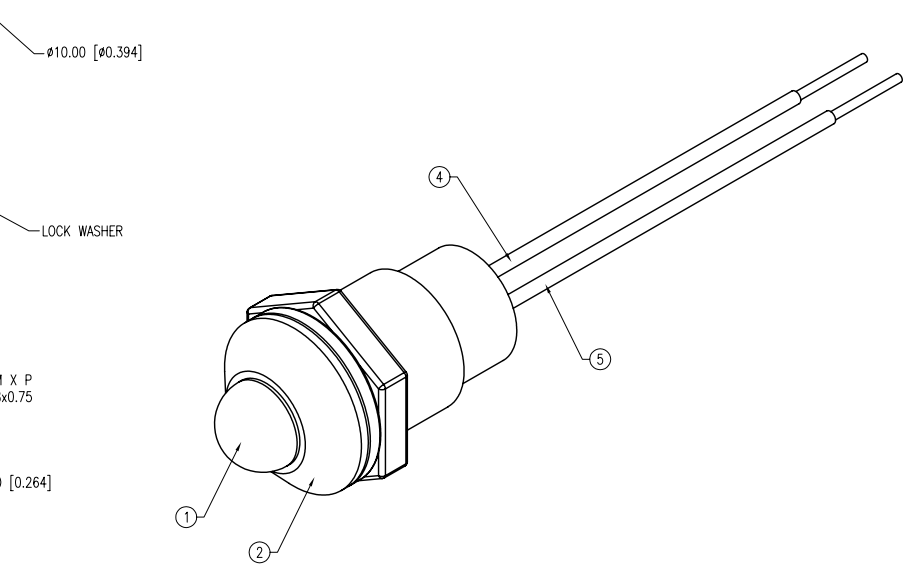

ELECTRO–OPTICAL CHARACTERISTICS Ta=25°C If=20mA

PARAMETER	MIN	TYP	MAX	UNITS	TEST COND
PEAK WAVELENGTH	(R/G)	700/565		nm	
FORWARD VOLTAGE	(R/G)	2.0/2.2	2.5/2.6	Vf	
REVERSE VOLTAGE	5.0			Vr	Ir=100µA
AXIAL INTENSITY		6/25		mcd	If=20mA
VIEWING ANGLE		60		2x theta	
EMITTED COLOR:	RED/GREEN				
LENS FINISH:	MILKY WHITE DIFFUSED				

LIMITS OF SAFE OPERATION AT 25°C

PARAMETER	MAX	UNITS
PEAK FORWARD CURRENT*	150	mA
STEADY CURRENT	25	mA
POWER DISSIPATION (R/G)	105/120	mW
DERATE FROM 25°C	–1.2	mW/°C
OPERATING TEMP.	–40 TO +85	°C
STORAGE TEMP.	–40 TO +85	°C
SOLDERING TEMP.	+260	°C
2.0mm FROM BODY	3	SEC.

* t<10µS

NOTES:

1. SSL–LX5093HGW, RED/GREEN LED. TRIM LEADS TO 4mm.
2. SSI–LXR3816–B, BLACK HOUSING.
3. SSH–LXH4815BSG, BUSHING (NOT SHOWN). INSERT AND CRIMP.
4. RED ANODE LEAD: LXP–WST24RDTOC, 24 AWG., TINNED OVERCOAT, RED INSULATION. CUT 160mm LONG, STRIP BOTH ENDS 3mm & 9.5mm.
5. GREEN ANODE LEAD: LXP–WST24BLTOC, 24 AWG., TINNED OVERCOAT, BLACK INSULATION. CUT 160mm LONG, STRIP BOTH ENDS 3mm & 9.5mm.
6. CRIMP WIRES TO LED LEADS.

PANEL CUTOUT

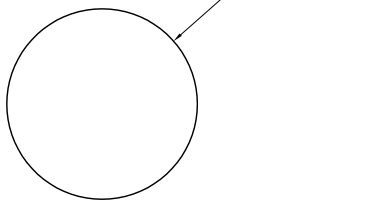

X=±1 (±0.039), X.X=±0.5 (±0.020), X.XX=±0.25 (±0.010), X.XXX=±0.127 (±0.005). LEAD SIZE=±0.05 (±0.002), LEAD LENGTH=±0.75 (±0.030). MIN= +DECIMAL PRECISION –0.00 MAX.= +0.00 –DECIMAL PRECISION

UNCONTROLLED DOCUMENT

HELEN ROAD
E, IL 60067–6976
+1.847.359.2790
1.847.359.6538
WWW.LUMEX.COM

T–5mm RED/GREEN LED PANEL INDICATOR, MILKY WHITE DIFFUSED LENS, 6.0" WIRE LEADS, BLACK HOUSING.

THE SPECIFICATIONS MAY CHANGE AT ANY TIME WITHOUT NOTICE DUE TO NEW MATERIALS OR PRODUCT IMPROVEMENT.

CONFIDENTIAL INFORMATION
THE INFORMATION CONTAINED IN THIS DOCUMENT IS THE PROPERTY OF LUMEX INC. EXCEPT AS SPECIFICALLY AUTHORIZED IN WRITING BY LUMEX INC., THE HOLDER OF THIS DOCUMENT SHALL KEEP ALL INFORMATION CONTAINED HEREIN CONFIDENTIAL AND SHALL PROTECT SAME IN WHOLE OR IN PART FROM DISCLOSURE AND DISSEMINATION TO ALL THIRD PARTIES.

DATE:	09.13.11	DRAWN BY:	AB
PAGE:	1 OF 1	CHKD BY:	JD
SCALE:	NTS	APRVD BY:	KF
UNIT:	mm [INCH]		

Looking for pricing, stock, or lifecycle information?

Click below to explore more details on WIN SOURCE:

- View SSI-LXR3816HGWB150 on WIN SOURCE
- Lumex Opto/Components Inc. Information

Optimize Your Supply Chain with WIN SOURCE Solutions

- Global Sourcing Solution
- Obsolete Management
- Cost Control Management
- Shortage Management
- Alternative Solution
- Excess Inventory Management