# THE DATASHEET OF

# SM6227JT8R20

www.win-source.net 0086-755-83957316

HEXFET® Power MOSFET

## Features

- Advanced Process Technology
- Ultra Low On-Resistance
- 175°C Operating Temperature
- Fast Switching
- Repetitive Avalanche Allowed up to Tjmax
- Lead-Free, RoHS Compliant
- Automotive Qualified *

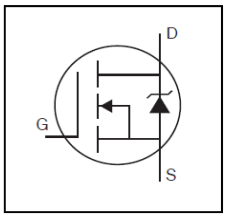


| | | |
|---|---|---|
| $V_{DSS}$ | | 60V |
| $R_{DS(on)}$ | typ. | 9.6mΩ |
| | max. | 12mΩ |
| $I_D$ | | 57A |

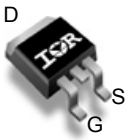


$D^2$Pak
AUIRFZ44VZS

| G | D | S |
|---|---|---|
| Gate | Drain | Source |

## Description

Specifically designed for Automotive applications, this HEXFET® Power MOSFET utilizes the latest processing techniques to achieve extremely low on-resistance per silicon area. Additional features of this design are a 175°C junction operating temperature, fast switching speed and improved repetitive avalanche rating . These features combine to make this design an extremely efficient and reliable device for use in Automotive applications and a wide variety of other applications

| Base part number | Package Type | Standard Pack | | Orderable Part Number |
|---|---|---|---|---|
| | | Form | Quantity | |
| AUIRFZ44VZS | $D^2$-Pak | Tube | 50 | AUIRFZ44VZS |
| | | Tape and Reel Left | 800 | AUIRFZ44VZSTRL |

## Absolute Maximum Ratings

Stresses beyond those listed under "Absolute Maximum Ratings" may cause permanent damage to the device. These are stress ratings only; and functional operation of the device at these or any other condition beyond those indicated in the specifications is not implied. Exposure to absolute-maximum-rated conditions for extended periods may affect device reliability. The thermal resistance and power dissipation ratings are measured under board mounted and still air conditions. Ambient temperature (TA) is 25°C, unless otherwise specified.

| Symbol | Parameter | Max. | Units |
|---|---|---|---|
| $I_D$ @ $T_C$ = 25°C | Continuous Drain Current, $V_{GS}$ @ 10V | 57 | A |
| $I_D$ @ $T_C$ = 100°C | Continuous Drain Current, $V_{GS}$ @ 10V | 40 | |
| $I_{DM}$ | Pulsed Drain Current ① | 230 | |
| $P_D$ @$T_C$ = 25°C | Maximum Power Dissipation | 92 | W |
| | Linear Derating Factor | 0.61 | W/°C |
| $V_{GS}$ | Gate-to-Source Voltage | ± 20 | V |
| $E_{AS\ (Thermally\ Limited)}$ | Single Pulse Avalanche Energy (Thermally Limited) ② | 73 | mJ |
| $E_{AS\ (Tested)}$ | Single Pulse Avalanche Energy (Tested Limited) ⑥ | 110 | |
| $I_{AR}$ | Avalanche Current ① | See Fig. 12a, 12b, 15, 16 | A |
| $E_{AR}$ | Repetitive Avalanche Energy ⑤ | | mJ |
| $T_J$<br>$T_{STG}$ | Operating Junction and<br>Storage Temperature Range | -55 to + 175 | °C |
| | Soldering Temperature, for 10 seconds (1.6mm from case) | 300 | |

## Thermal Resistance

| Symbol | Parameter | Typ. | Max. | Units |
|---|---|---|---|---|
| $R_{\theta JC}$ | Junction-to-Case | —— | 1.64 | °C/W |
| $R_{\theta JA}$ | Junction-to-Ambient (PCB Mount), $D^2$ Pak ⑦ | —— | 40 | |

HEXFET® is a registered trademark of Infineon.

*Qualification standards can be found at www.infineon.com

**Static @ $T_J$ = 25°C (unless otherwise specified)**

| | Parameter | Min. | Typ. | Max. | Units | Conditions |
|---|---|---|---|---|---|---|
| $V_{(BR)DSS}$ | Drain-to-Source Breakdown Voltage | 60 | — | — | V | $V_{GS}$ = 0V, $I_D$ = 250μA |
| $\Delta V_{(BR)DSS}/\Delta T_J$ | Breakdown Voltage Temp. Coefficient | — | 0.061 | — | V/°C | Reference to 25°C, $I_D$ = 1mA |
| $R_{DS(on)}$ | Static Drain-to-Source On-Resistance | — | 9.6 | 12 | mΩ | $V_{GS}$ = 10V, $I_D$ = 34A ③ |
| $V_{GS(th)}$ | Gate Threshold Voltage | 2.0 | — | 4.0 | V | $V_{DS}$ = $V_{GS}$, $I_D$ = 250μA |
| gfs | Forward Trans conductance | 25 | — | — | S | $V_{DS}$ = 25V, $I_D$ = 34A |
| $I_{DSS}$ | Drain-to-Source Leakage Current | — | — | 20 | μA | $V_{DS}$ = 60V, $V_{GS}$ = 0V |
| | | — | — | 250 | | $V_{DS}$ = 60V,$V_{GS}$ = 0V,$T_J$ =125°C |
| $I_{GSS}$ | Gate-to-Source Forward Leakage | — | — | 200 | nA | $V_{GS}$ = 20V |
| | Gate-to-Source Reverse Leakage | — | — | -200 | | $V_{GS}$ = -20V |

**Dynamic Electrical Characteristics @ $T_J$ = 25°C (unless otherwise specified)**

| | | | | | | |
|---|---|---|---|---|---|---|
| $Q_g$ | Total Gate Charge | — | 43 | 65 | nC | $I_D$ = 34A |
| $Q_{gs}$ | Gate-to-Source Charge | — | 11 | — | | $V_{DS}$ = 48V |
| $Q_{gd}$ | Gate-to-Drain Charge | — | 18 | — | | $V_{GS}$ = 10V ③ |
| $t_{d(on)}$ | Turn-On Delay Time | — | 14 | — | ns | $V_{DD}$ = 30V |
| $t_r$ | Rise Time | — | 62 | — | | $I_D$ = 34A |
| $t_{d(off)}$ | Turn-Off Delay Time | — | 35 | — | | $R_G$= 12Ω |
| $t_f$ | Fall Time | — | 38 | — | | $V_{GS}$ = 10V ③ |
| $L_D$ | Internal Drain Inductance | — | 4.5 | — | nH | Between lead, 6mm (0.25in.) from package and center of die contact 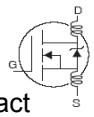 |
| $L_S$ | Internal Source Inductance | — | 7.5 | — | | |
| $C_{iss}$ | Input Capacitance | — | 1690 | — | pF | $V_{GS}$ = 0V |
| $C_{oss}$ | Output Capacitance | — | 270 | — | | $V_{DS}$ = 25V |
| $C_{rss}$ | Reverse Transfer Capacitance | — | 130 | — | | $f$ = 1.0MHz |
| $C_{oss}$ | Output Capacitance | — | 1870 | — | | $V_{GS}$ = 0V, $V_{DS}$ = 1.0V,$f$ = 1.0MHz |
| $C_{oss}$ | Output Capacitance | — | 260 | — | | $V_{GS}$ = 0V, $V_{DS}$ = 48V,$f$ = 1.0MHz |
| $C_{oss\ eff.}$ | Effective Output Capacitance | — | 510 | — | | $V_{GS}$ = 0V, $V_{DS}$ = 0V to 48V④ |

**Diode Characteristics**

| | Parameter | Min. | Typ. | Max. | Units | Conditions |
|---|---|---|---|---|---|---|
| $I_S$ | Continuous Source Current (Body Diode) | — | — | 57 | A | MOSFET symbol showing the integral reverse p-n junction diode. 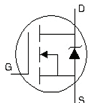 |
| $I_{SM}$ | Pulsed Source Current (Body Diode) ① | — | — | 230 | | |
| $V_{SD}$ | Diode Forward Voltage | — | — | 1.3 | V | $T_J$ = 25°C,$I_S$ = 34A,$V_{GS}$ = 0V ③ |
| $t_{rr}$ | Reverse Recovery Time | — | 23 | 35 | ns | $T_J$ = 25°C ,$I_F$ = 34A, $V_{DD}$ = 30V |
| $Q_{rr}$ | Reverse Recovery Charge | — | 17 | 26 | nC | di/dt = 100A/μs ③ |
| $t_{on}$ | Forward Turn-On Time | Intrinsic turn-on time is negligible (turn-on is dominated by $L_S$+$L_D$) | | | | |

**Notes:**

① Repetitive rating; pulse width limited by max. junction temperature. (See fig.11)

② Limited by $T_{Jmax,}$ starting $T_J$ = 25°C, L = 0.12mH, $R_G$ = 25Ω, $I_{AS}$ = 34A, $V_{GS}$ =10V. Part not recommended for use above this value.

③ Pulse width ≤ 400μs; duty cycle ≤ 2%.

④ $C_{oss\ eff.}$ is a fixed capacitance that gives the same charging time as $C_{oss}$ while $V_{DS}$ is rising from 0 to 80% $V_{DSS}$ .

⑤ Limited by $T_{Jmax}$ , see Fig.12a, 12b, 15, 16 for typical repetitive avalanche performance.

⑥ This value determined from sample failure population. 100% tested to this value in production, starting $T_J$ = 25°C, L = 0.12mH, $R_G$ = 25Ω, $I_{AS}$ = 34A, $V_{GS}$ =10V. .

⑦ This is applied to $D^2$Pak, when mounted on 1" square PCB (FR-4 or G-10 Material). For recommended footprint and soldering techniques refer to application note #AN-994..

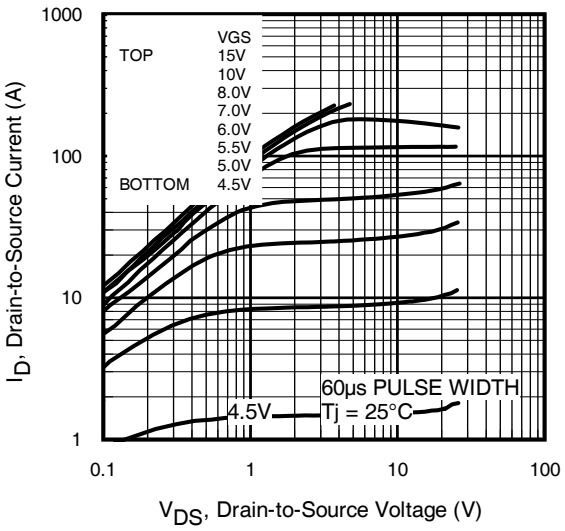


**Fig. 1** Typical Output Characteristics

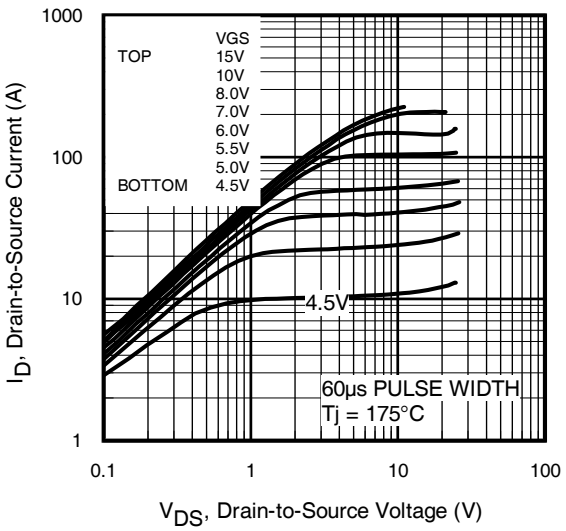


**Fig. 2** Typical Output Characteristics

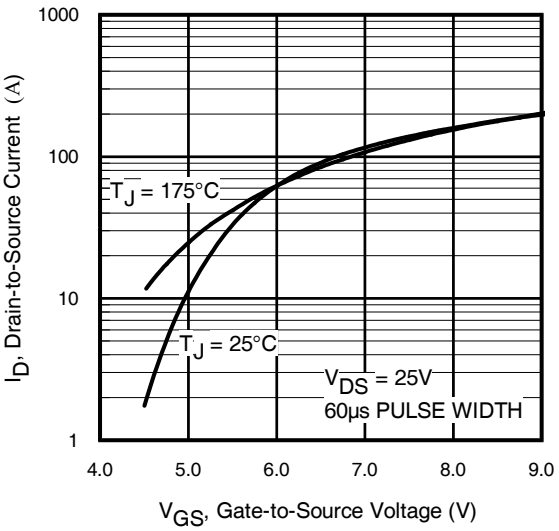


**Fig. 3** Typical Transfer Characteristics

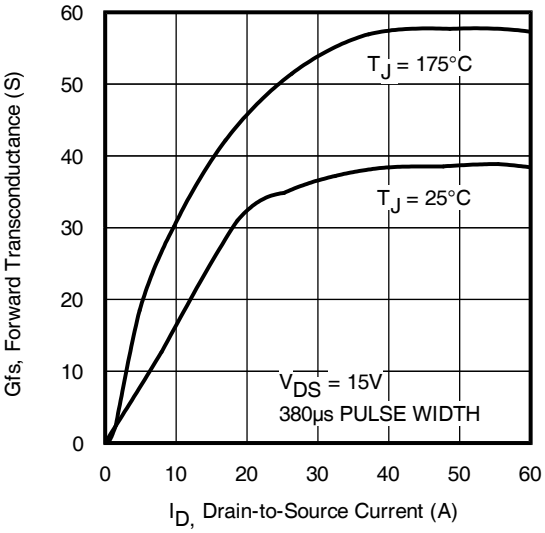


**Fig. 4** Typical Forward Trans conductance Vs. Drain Current

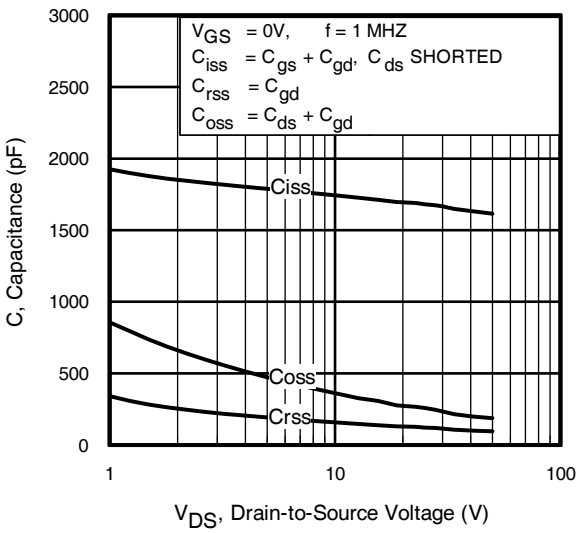


**Fig 5.** Typical Capacitance vs. Drain-to-Source Voltage

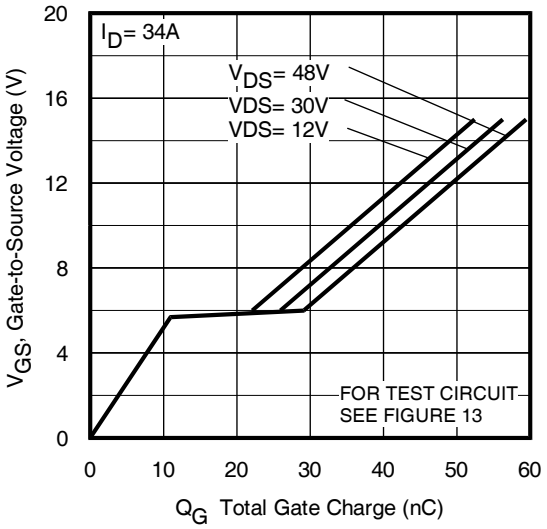


**Fig 6.** Typical Gate Charge vs. Gate-to-Source Voltage

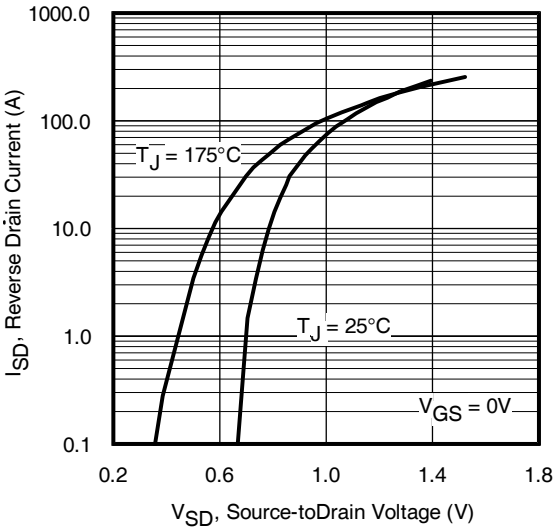


**Fig. 7** Typical Source-to-Drain Diode Forward Voltage

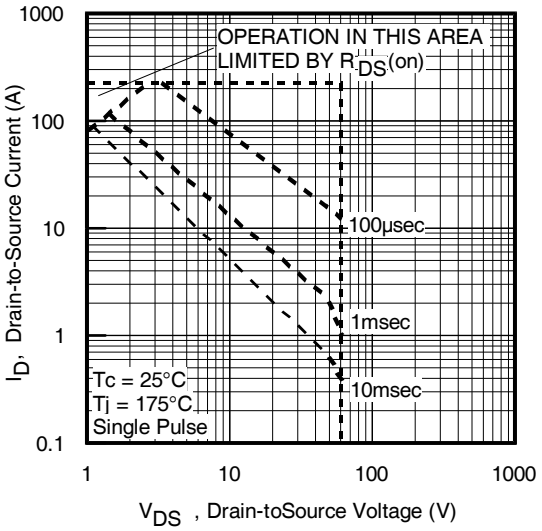


**Fig 8.** Maximum Safe Operating Area

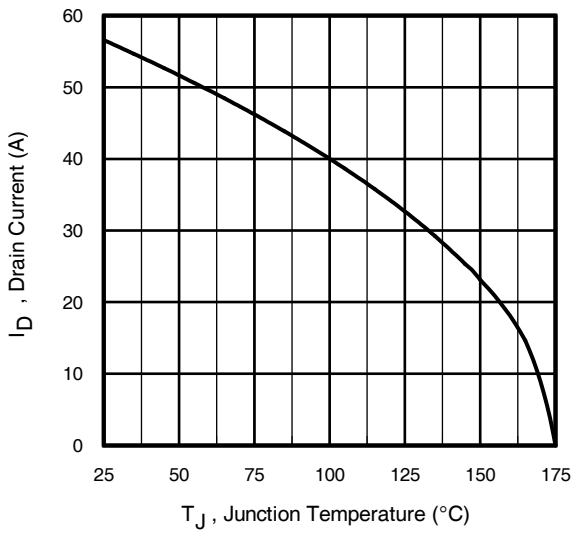


**Fig 9.** Maximum Drain Current Vs. Case Temperature

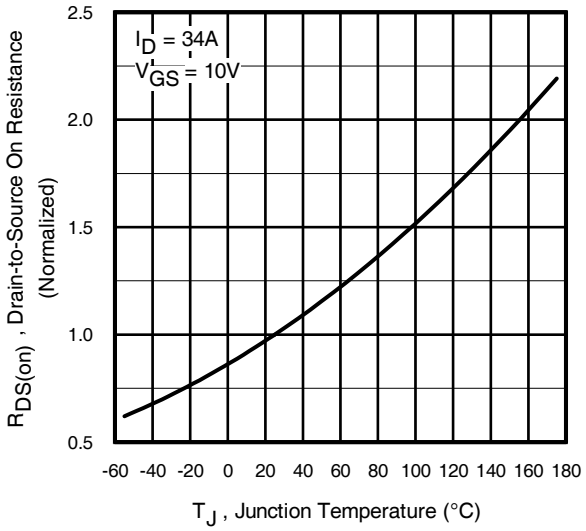


**Fig 10.** Normalized On-Resistance Vs. Temperature

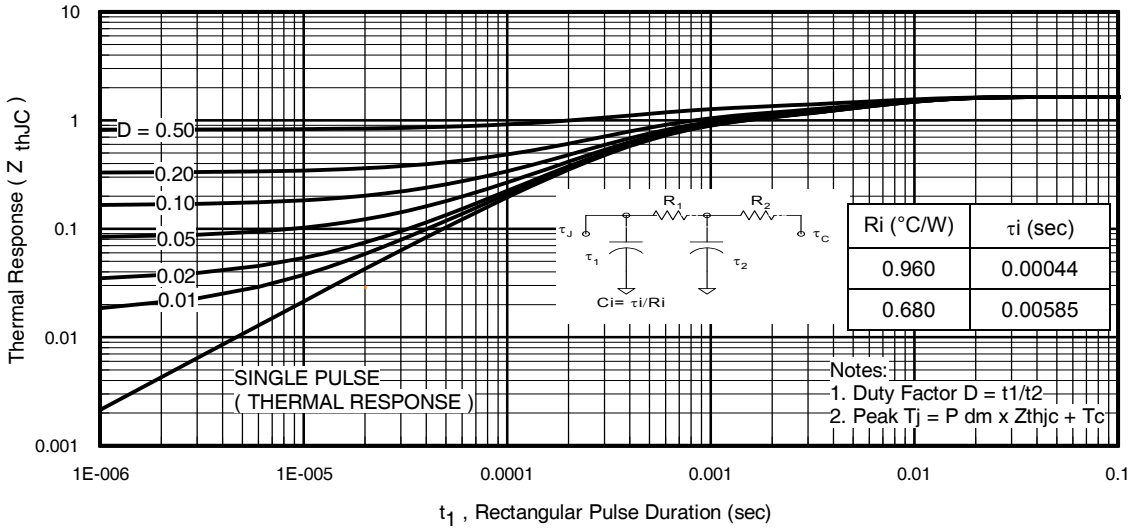


**Fig 11.** Maximum Effective Transient Thermal Impedance, Junction-to-Case

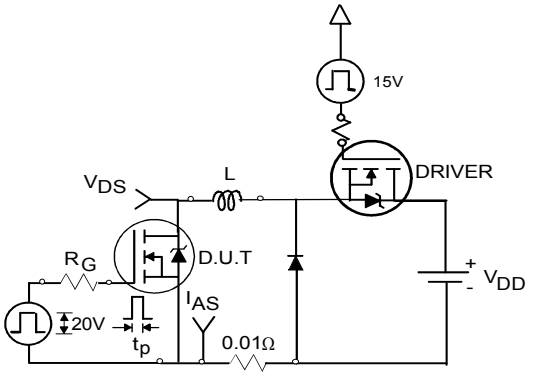


**Fig 12a.** Unclamped Inductive Test Circuit

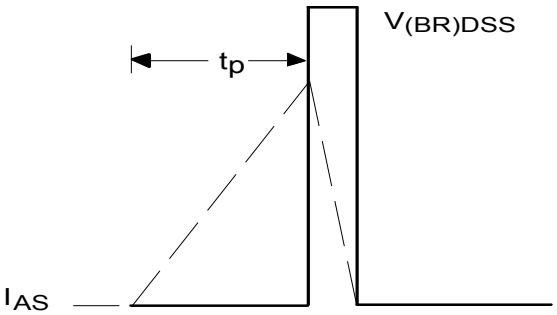


**Fig 12b.** Unclamped Inductive Waveforms

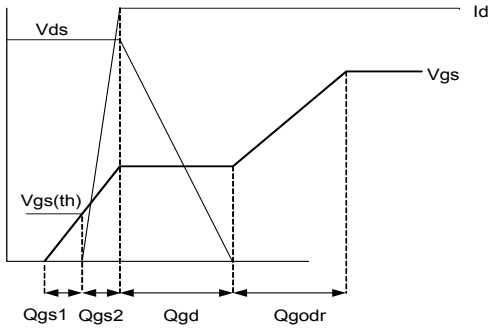


**Fig 13a.** Gate Charge Waveform

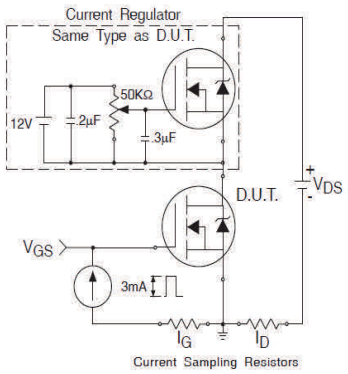


**Fig 13b.** Gate Charge Test Circuit

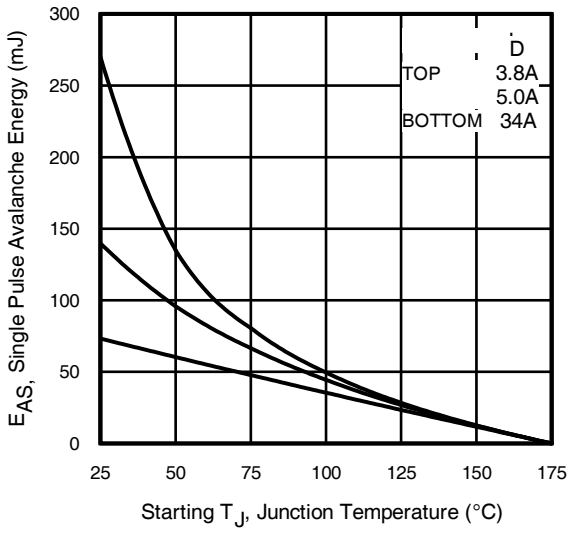


**Fig 12c.** Maximum Avalanche Energy vs. Drain Current

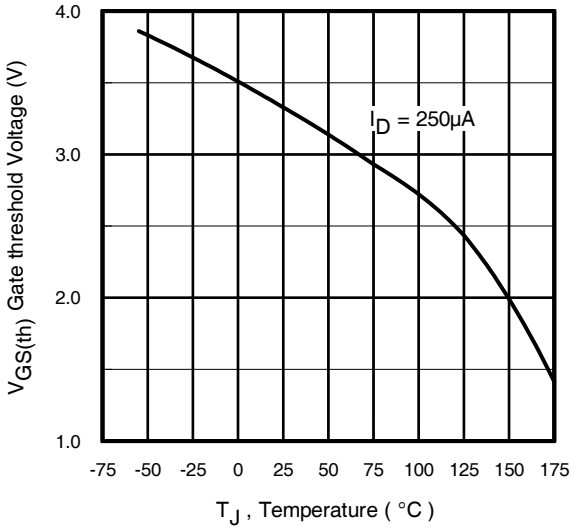


**Fig 14.** Threshold Voltage Vs. Temperature

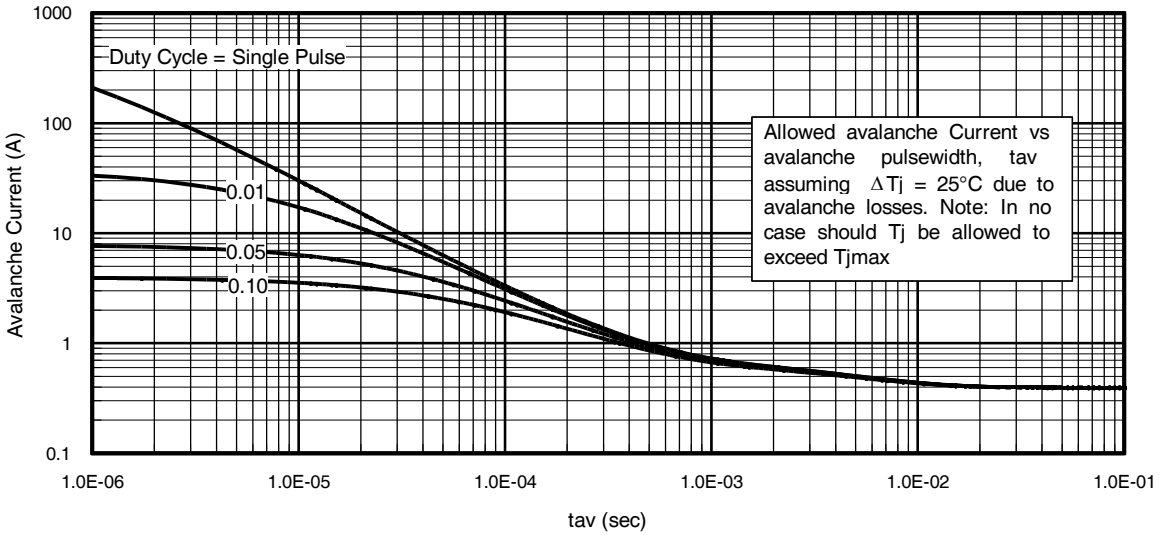


**Fig 15.** Typical Avalanche Current Vs. Pulse width

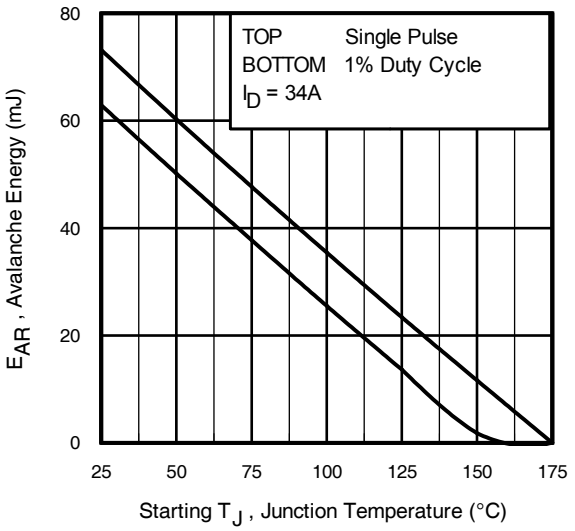


**Notes on Repetitive Avalanche Curves , Figures 15, 16:**
**(For further info, see AN-1005 at www.infineon.com)**

1. Avalanche failures assumption:
   Purely a thermal phenomenon and failure occurs at a temperature far in excess of $T_{jmax}$. This is validated for every part type.
2. Safe operation in Avalanche is allowed as long as $T_{jmax}$ is not exceeded.
3. Equation below based on circuit and waveforms shown in Figures 12a, 12b.
4. $P_{D\ (ave)}$ = Average power dissipation per single avalanche pulse.
5. BV = Rated breakdown voltage (1.3 factor accounts for voltage increase during avalanche).
6. $I_{av}$ = Allowable avalanche current.
7. ΔT = Allowable rise in junction temperature, not to exceed $T_{jmax}$ (assumed as 25°C in Figure 14, 15).
   $t_{av}$ = Average time in avalanche.
   D = Duty cycle in avalanche = $t_{av} \cdot f$
   $Z_{thJC}(D, t_{av})$ = Transient thermal resistance, see Figures 13)

$$P_{D\ (ave)} = 1/2\ (1.3 \cdot BV \cdot I_{av}) = \Delta T / Z_{thJC}$$
$$I_{av} = 2\Delta T / [1.3 \cdot BV \cdot Z_{th}]$$
$$E_{AS\ (AR)} = P_{D\ (ave)} \cdot t_{av}$$

**Fig 16.** Maximum Avalanche Energy vs. Temperature

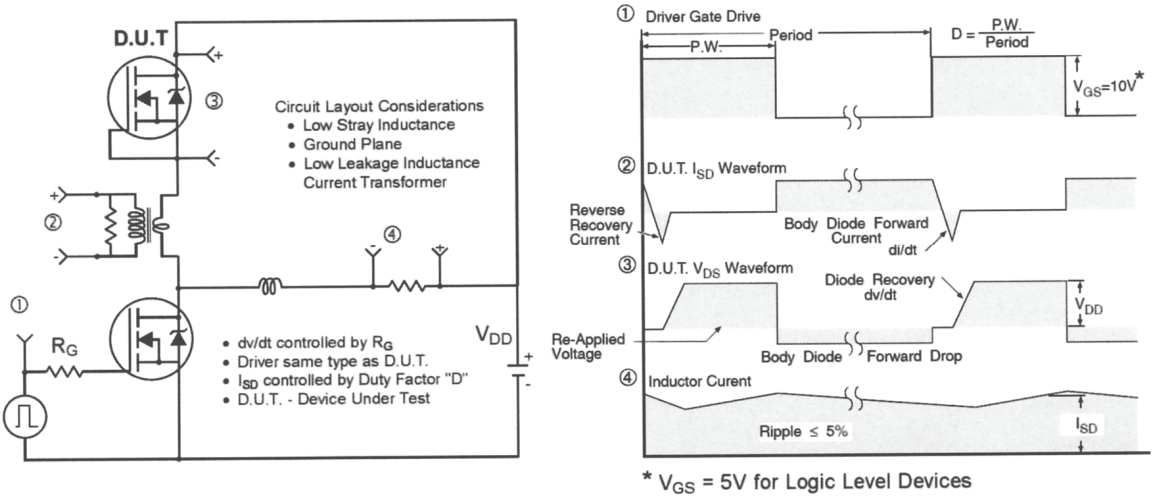


**Fig 17.** Peak Diode Recovery dv/dt Test Circuit for N-Channel HEXFET® Power MOSFETs

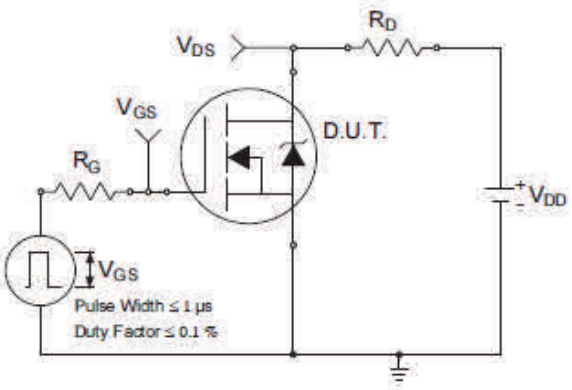


**Fig 18a.** Switching Time Test Circuit

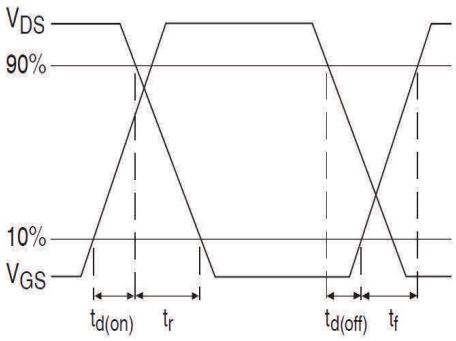


**Fig 18b.** Switching Time Waveforms

## $D^2$-Pak (TO-263AB) Package Outline (Dimensions are shown in millimeters (inches))

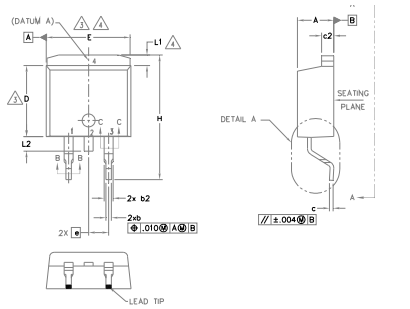


NOTES:

1. DIMENSIONING AND TOLERANCING PER ASME Y14.5M-1994
2. DIMENSIONS ARE SHOWN IN MILLIMETERS [INCHES].
3. DIMENSION D & E DO NOT INCLUDE MOLD FLASH. MOLD FLASH SHALL NOT EXCEED 0.127 [.005"] PER SIDE. THESE DIMENSIONS ARE MEASURED AT THE OUTMOST EXTREMES OF THE PLASTIC BODY AT DATUM H.
4. THERMAL PAD CONTOUR OPTIONAL WITHIN DIMENSION E, L1, D1 & E1.
5. DIMENSION b1, b3 AND c1 APPLY TO BASE METAL ONLY.
6. DATUM A & B TO BE DETERMINED AT DATUM PLANE H.
7. CONTROLLING DIMENSION: INCH.
8. OUTLINE CONFORMS TO JEDEC OUTLINE TO-263AB.

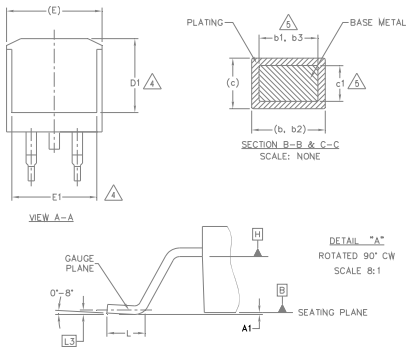


| SYMBOL | DIMENSIONS | | | | NOTES |
|---|---|---|---|---|---|
| | MILLIMETERS | | INCHES | | |
| | MIN. | MAX. | MIN. | MAX. | |
| A | 4.06 | 4.83 | .160 | .190 | |
| A1 | 0.00 | 0.254 | .000 | .010 | |
| b | 0.51 | 0.99 | .020 | .039 | |
| b1 | 0.51 | 0.89 | .020 | .035 | 5 |
| b2 | 1.14 | 1.78 | .045 | .070 | |
| b3 | 1.14 | 1.73 | .045 | .068 | 5 |
| c | 0.38 | 0.74 | .015 | .029 | |
| c1 | 0.38 | 0.58 | .015 | .023 | 5 |
| c2 | 1.14 | 1.65 | .045 | .065 | |
| D | 8.38 | 9.65 | .330 | .380 | 3 |
| D1 | 6.86 | — | .270 | — | 4 |
| E | 9.65 | 10.67 | .380 | .420 | 3,4 |
| E1 | 6.22 | — | .245 | — | 4 |
| e | 2.54 BSC | | .100 BSC | | |
| H | 14.61 | 15.88 | .575 | .625 | |
| L | 1.78 | 2.79 | .070 | .110 | |
| L1 | — | 1.68 | — | .066 | 4 |
| L2 | — | 1.78 | — | .070 | |
| L3 | 0.25 BSC | | .010 BSC | | |

LEAD ASSIGNMENTS

DIODES
1.– ANODE (TWO DIE) / OPEN (ONE DIE)
2, 4.– CATHODE
3.– ANODE

HEXFET
1.– GATE
2, 4.– DRAIN
3.– SOURCE

IGBTs, CoPACK
1.– GATE
2, 4.– COLLECTOR
3.– EMITTER

## $D^2$-Pak (TO-263AB) Part Marking Information

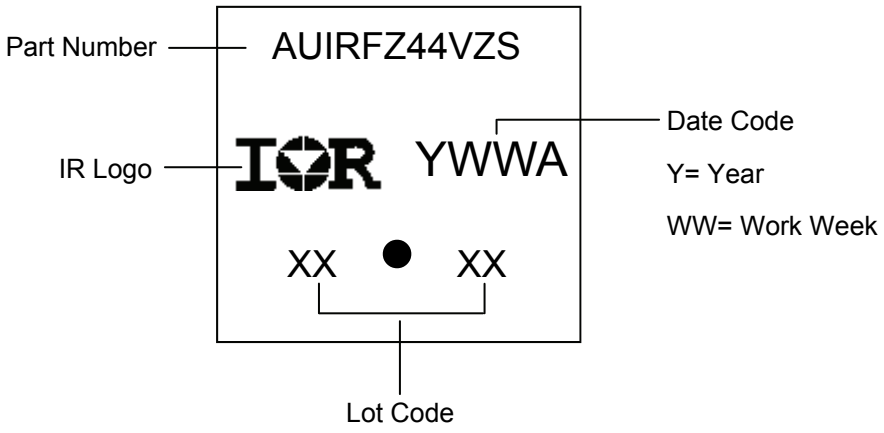

**D²-Pak (TO-263AB) Tape & Reel Information** (Dimensions are shown in millimeters (inches))

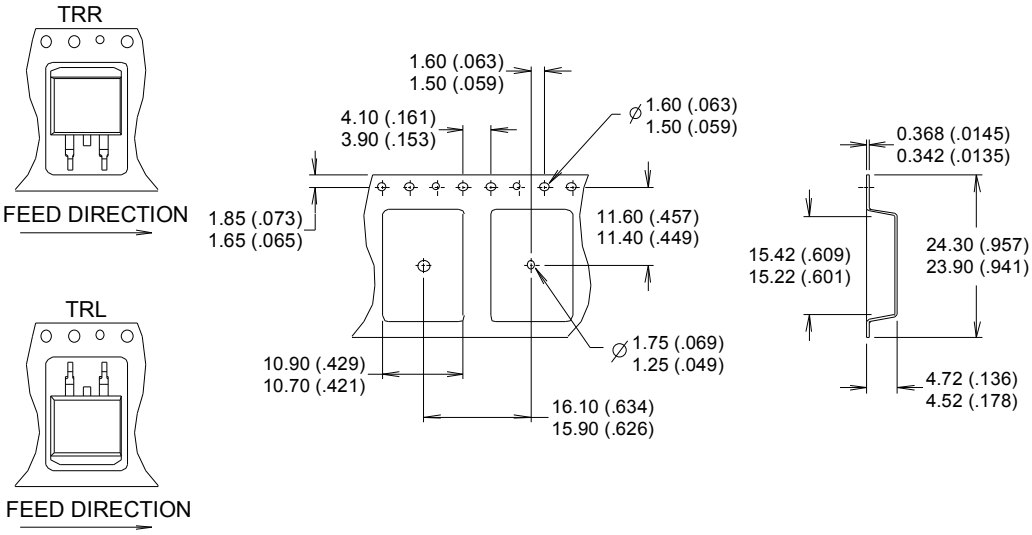


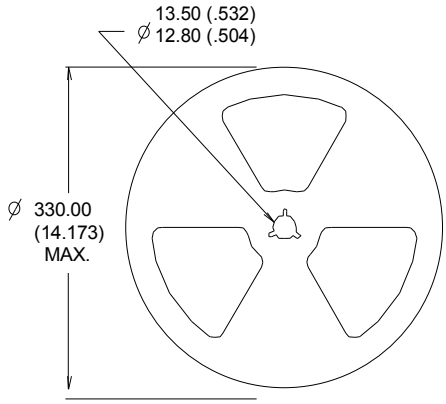


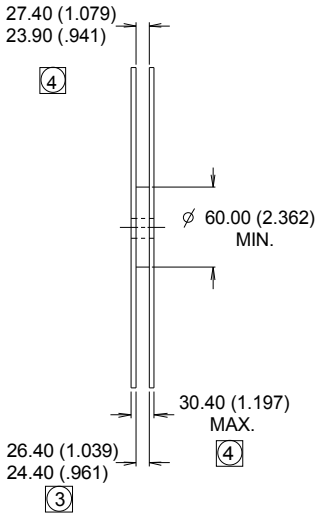


NOTES :
1. COMFORMS TO EIA-418.
2. CONTROLLING DIMENSION: MILLIMETER.
3. DIMENSION MEASURED @ HUB.
4. INCLUDES FLANGE DISTORTION @ OUTER EDGE.

**Qualification Information**

| | | | |
|---|---|---|---|
| **Qualification Level** | | Automotive (per AEC-Q101) | |
| | | Comments: This part number(s) passed Automotive qualification. Infineon's Industrial and Consumer qualification level is granted by extension of the higher Automotive level. | |
| **Moisture Sensitivity Level** | | $D^2$-Pak | MSL1 |
| **ESD** | Machine Model | Class M4 (+/- 425V)† AEC-Q101-002 | |
| | Human Body Model | Class H1B (+/- 1000V)† AEC-Q101-001 | |
| | Charged Device Model | Class C5 (+/- 1125V)† AEC-Q101-005 | |
| **RoHS Compliant** | | Yes | |

† Highest passing voltage.

**Revision History**

| Date | Comments |
|---|---|
| 10/27/2015 | • Updated datasheet with corporate template<br>• Corrected ordering table on page 1. |
| 10/13/2017 | • Corrected typo error on part marking on page 9. |

**Published by**
**Infineon Technologies AG**
**81726 München, Germany**
**© Infineon Technologies AG 2015**
**All Rights Reserved.**

**IMPORTANT NOTICE**

The information given in this document shall in no event be regarded as a guarantee of conditions or characteristics ("Beschaffenheitsgarantie"). With respect to any examples, hints or any typical values stated herein and/or any information regarding the application of the product, Infineon Technologies hereby disclaims any and all warranties and liabilities of any kind, including without limitation warranties of non-infringement of intellectual property rights of any third party.

In addition, any information given in this document is subject to customer's compliance with its obligations stated in this document and any applicable legal requirements, norms and standards concerning customer's products and any use of the product of Infineon Technologies in customer's applications.

The data contained in this document is exclusively intended for technically trained staff. It is the responsibility of customer's technical departments to evaluate the suitability of the product for the intended application and the completeness of the product information given in this document with respect to such application.

For further information on the product, technology, delivery terms and conditions and prices please contact your nearest Infineon Technologies office (www.infineon.com).

**WARNINGS**

Due to technical requirements products may contain dangerous substances. For information on the types in question please contact your nearest Infineon Technologies office.

Except as otherwise explicitly approved by Infineon Technologies in a written document signed by authorized representatives of Infineon Technologies, Infineon Technologies' products may not be used in any applications where a failure of the product or any consequences of the use thereof can reasonably be expected to result in personal injury.

## Looking for pricing, stock, or lifecycle information?

Click below to explore more details on WIN SOURCE:

- View SM6227JT8R20 on WIN SOURCE
- Stackpole Electronics Inc. Information

## Optimize Your Supply Chain with WIN SOURCE Solutions

- Global Sourcing Solution
- Obsolete Management
- Cost Control Management
- Shortage Management
- Alternative Solution
- Excess Inventory Management