THE DATASHEET OF

3610SB-05W-B30-B00

www.win-source.net 0086-755-83957316

09225SA (92□ x 25L)

Legacy Part No. 3610SB

General Specifications

Motor Protection:
Auto Restart/Polarity Protection

Insulation Resistance:
10M Ω or over with a DC500V Megger

Dielectric Withstand Voltage: AC 700V 1s

Allowable Ambient Temperature Range:
-10°C ~ +70°C (Operating)
-40°C ~ +70°C (Storage)
(non-condensing environment)

Expected Life

Failure Rate: 10%
60°C 40,000 Hours (AA/EA)

Characteristic Curves

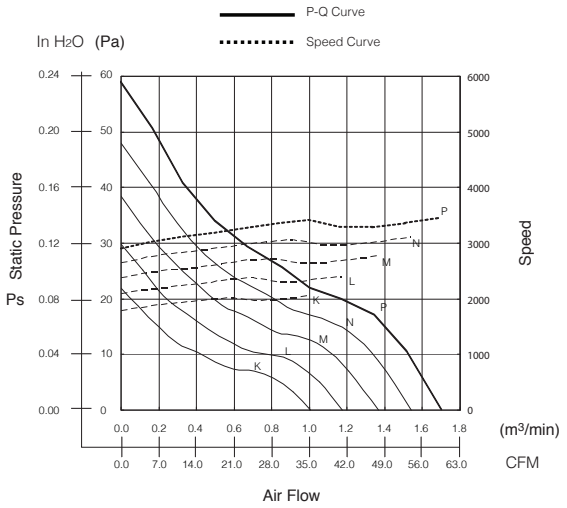

Material

Casing : Plastic (Black) UL94V-0
Impeller : Plastic (Black) UL94V-0
Bearing : Ball Bearing
Lead Wire : UL3385, AWG26, +Red, -Black

Outline

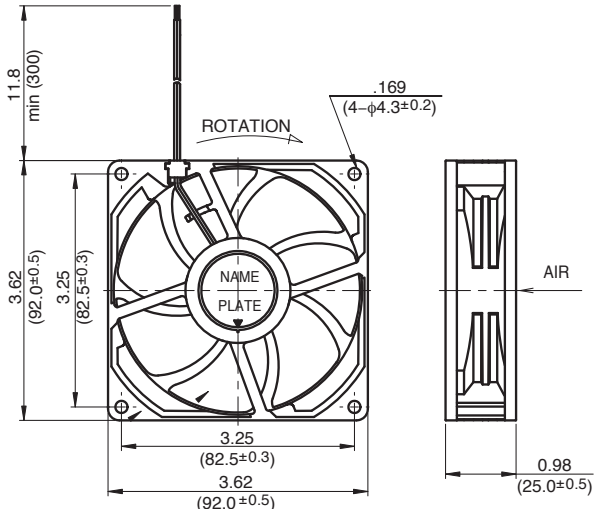

Panel Cut-Outs

Units: inch (mm)

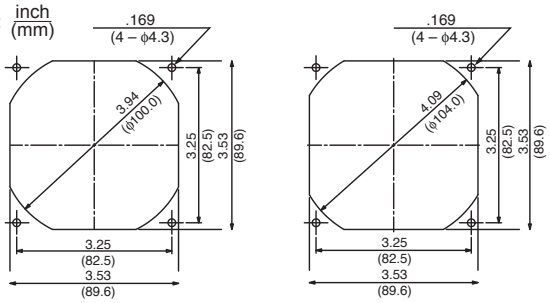

INLET SIDE OUTLET SIDE

Specifications

MODEL	LEGACY P/N	Rated Voltage	Operating Voltage	Current	Input Power	Speed	Max. Air Flow		Max. Static Pressure		Noise	Mass
		(V)	(V)	(A)*1	(W)*1	(min-1)*1	CFM*1	(m3/min)*1	in H2O	(Pa)*1	(dB)*1	(g)
09225SA-12K-AA-D0	3610SB-04W-B20-B00	12	6 ~ 13.8	0.07	0.84	2050	33.5	0.95	0.09	21.5	22.0	95
09225SA-12L-AA-D0	3610SB-04W-B30-B00	12	6 ~ 13.8	0.10	1.20	2400	39.9	1.13	0.12	29.0	25.0	95
09225SA-12M-AA-D0	3610SB-04W-B40-B00	12	6 ~ 13.8	0.14	1.68	2750	45.2	1.28	0.15	36.2	29.0	95
09225SA-12N-AA-D0	3610SB-04W-B50-B00	12	6 ~ 13.8	0.16	1.92	3100	51.2	1.45	0.18	45.0	32.0	95
09225SA-12P-AA-D0	3610SB-04W-B60-B00	12	6 ~ 13.2	0.23	2.76	3550	62.5	1.77	0.24	61.0	39.0	95
09225SA-24K-AA-D0	3610SB-05W-B20-B00	24	12 ~ 27.6	0.04	0.96	2050	33.5	0.95	0.09	21.5	22.0	95
09225SA-24L-AA-D0	3610SB-05W-B30-B00	24	12 ~ 27.6	0.05	1.20	2400	39.9	1.13	0.12	29.0	25.0	95
09225SA-24M-AA-D0	3610SB-05W-B40-B00	24	12 ~ 27.6	0.07	1.68	2750	45.2	1.28	0.15	36.2	29.0	95
09225SA-24N-AA-D0	3610SB-05W-B50-B00	24	12 ~ 26.4	0.08	1.92	3100	51.2	1.45	0.18	45.0	32.0	95
09225SA-24P-AA-D0	3610SB-05W-B60-B00	24	10 ~ 27.6	0.12	2.88	3550	62.5	1.77	0.24	61.0	39.0	95

Rotation: Clockwise Airflow Outlet: Air Out Over Struts *1: Average Values in Free Air Note: PWM/Locked Rotor/Tach Available

Looking for pricing, stock, or lifecycle information?

Click below to explore more details on WIN SOURCE:

- View 3610SB-05W-B30-B00 on WIN SOURCE
- NMB Technologies Corporation Information

Optimize Your Supply Chain with WIN SOURCE Solutions

- Global Sourcing Solution
- Obsolete Management
- Cost Control Management
- Shortage Management
- Alternative Solution
- Excess Inventory Management