THE DATASHEET OF

SQCD-025-12.00-STR-TEU-1-S

REVISION T

DO NOT SCALE FROM THIS PRINT

TABLE 4	
END TO END *	"L"
DV TO DV	.950[24.13]
DV TO EM (-TEX)	.835[21.21]
DV TO EM (-SEX)	.806[20.48]
EM (-TEX) TO EM (-TEX)	.720[18.29]
EM (-TEX) TO EM (-SEX)	.691[17.55]
EM (-SEX) TO EM (-SEX)	.662[16.81]
DV-N TO DV-N	.840[21.34]
DV-N TO EM (-TEX)	.780[19.81]
DV-N TO EM (-SEX)	.751[19.08]

* REFERENCE EM FOR -TPX AND -SPX

THIS PRODUCT MANUFACTURED WITH LEAD-FREE PROCESSING

SQCD-XXX-XX.XX-XXX-XXX-X-X

No OF POSITIONS
-025, -050, -075, -100
(PER ROW)

LENGTH
-XX.XX (INCHES)
(01.72[43.7] MIN)
(SEE NOTE 2)
(SEE NOTE 9)

END OPTION
-F: SCREW OPTION FIRST END ONLY (SEE NOTE 10)
-S: SCREW OPTION SECOND END ONLY
-B: SCREW OPTION BOTH ENDS (SEE NOTE 10)
-N: NO CAPS
(SEE FIG 3, SHEET 5 FOR EDGE MOUNT END OPTIONS)
(SEE FIG 4, SHEET 5 FOR DOUBLE VERTICAL END OPTIONS)
(SEE FIG 5, SHEET 5 FOR NO CAPS OPTION)
(LEAVE BLANK FOR STANDARD CAPS BOTH ENDS)

WIRING OPTION
-1: PIN 1 TO PIN 1
-2: PIN 1 TO PIN 2
-3: PIN 1 TO PIN N-1
-4: PIN 1 TO PIN N
(SEE TABLE 9, SHEET 7)

-TTR: TERMINAL, TOP, RIGHT
-TTL: TERMINAL, TOP, LEFT
-TBR: TERMINAL, BOTTOM, RIGHT
-TBL: TERMINAL, BOTTOM, LEFT
-STR: SOCKET, TOP, RIGHT
-STL: SOCKET, TOP, LEFT
-SBR: SOCKET, BOTTOM, RIGHT
-SBL: SOCKET, BOTTOM, LEFT
(SEE TABLE 1 & SHEET 2)

-TEU: TERMINAL, EDGE MOUNT, UP
-TED: TERMINAL, EDGE MOUNT, DOWN
-SEU: SOCKET, EDGE MOUNT, UP
-SED: SOCKET, EDGE MOUNT, DOWN
(SEE TABLE 5 & SHEET 4)

-TPU: TERMINAL, PANEL MOUNT, UP
-TPD: TERMINAL, PANEL MOUNT, DOWN
-SPU: SOCKET, PANEL MOUNT, UP
-SPD: SOCKET, PANEL MOUNT, DOWN
(SEE TABLE 11 & SHEET 6)
(ONLY AVAILABLE ON -025,-050, AND -075)

SECOND END

-TTR: TERMINAL, TOP, RIGHT
-TTL: TERMINAL, TOP, LEFT
-TBR: TERMINAL, BOTTOM, RIGHT
-TBL: TERMINAL, BOTTOM, LEFT
-STR: SOCKET, TOP, RIGHT
-STL: SOCKET, TOP, LEFT
-SBR: SOCKET, BOTTOM, RIGHT
-SBL: SOCKET, BOTTOM, LEFT
(SEE TABLE 1 & SHEET 3)

-TEU: TERMINAL, EDGE MOUNT, UP
-TED: TERMINAL, EDGE MOUNT, DOWN
-SEU: SOCKET, EDGE MOUNT, UP
-SED: SOCKET, EDGE MOUNT, DOWN
(SEE TABLE 5 & SHEET 4)

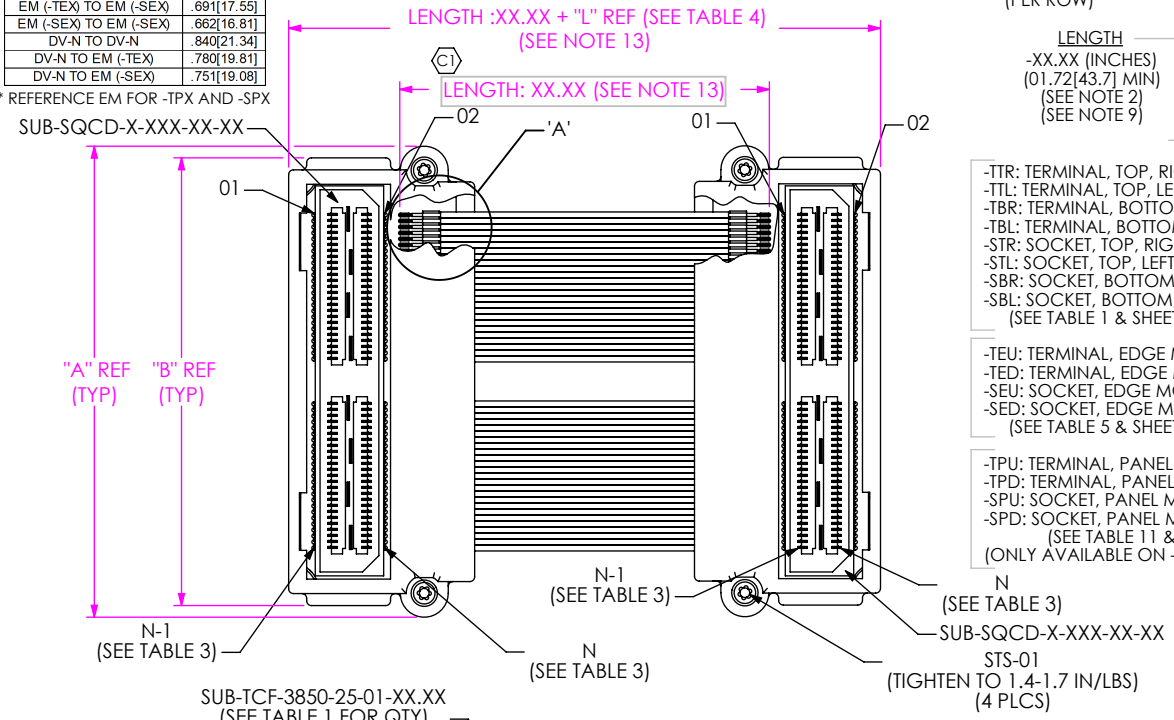

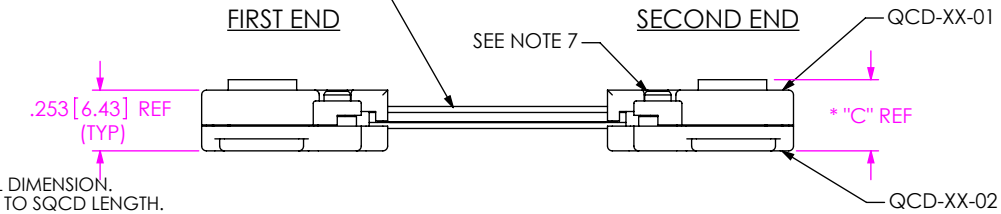

FIG 1
VERTICAL
(SQCD-050-XX.XX-STR-STR-1 SHOWN)

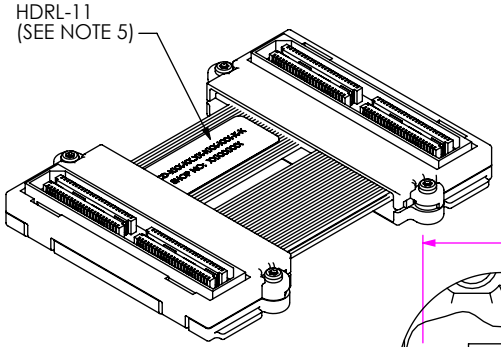

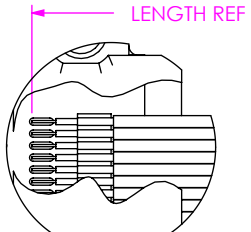

DETAIL 'A'
SCALE 2.5 : 1

TABLE 2	
END	* "C"
-TXX	.333[8.46]
-SXX	.296[7.52]

* -DV END OPTIONS ONLY

NOTES:
1. Ⓒ REPRESENTS A CRITICAL DIMENSION.
2. SUB-TCF LENGTH IS EQUAL TO SQCD LENGTH.
3. (C2) ALL ASSEMBLIES TO BE 100% ELECTRICALLY TESTED FOR SHORTS AND OPENS.
4. ALL ASSEMBLIES TO BE 100% HI-POT TESTED AT 300V.
5. (C3) TOP SUB-TCF NOT SHOWN IN THIS VIEW FOR CLARITY; HDRL-11 TO BE CENTERED ON LOWER SUB-TCF AS SHOWN; HDRL-11 IS TO CONTAIN:
   LINE 1- PART NUMBER "SQCD-XXX-XX.XX-XXX-XXX-X-X"
   LINE 2- SHOP ORDER NUMBER "XXXXXX"
   LINE 3- DATE CODE "XXXXX"'
6. PACKAGE ASSEMBLIES IN ANTI-STATIC & STATIC DISSIPATIVE BAGS.
7. TOP SURFACE OF SCREW TO BE FLUSH OR BELOW TOP SURFACE OF CAP.
8. PARTS TO BE PROCESSED PER SAMTEC ACCEPTABILITY REQUIREMENTS: HDR-PI-01 "CABLE ASSEMBLY WORKMANSHIP STANDARDS.
9. CABLE LENGTHS LONGER THAN 40.00 INCHES ARE NOT SUPPORTED BY S.I. TEST DATA.
10. -F AND -B END OPTIONS NOT AVAILABLE WITH TPU, TPD, SPU, SPD ON FIRST END.
11. ALL SIGNAL PINS TRANSMITTED ACROSS COAX CONDUCTOR. GROUND BLADES TIED TO COAX SHIELD. FOR MULTIPLE BANK ASSEMBLIES, EACH BANK IS GROUND INDEPENDENT OF THE OTHERS.
12. REFER TO PREP-SPEC DOCUMENT FOR CABLE PREP DIMENSIONS. ASSEMBLY USES STANDARD PCB PREP.
13. FOR CABLE LENGTHS LESS THAN 5 INCHES, CABLE LENGTH AND OVERALL LENGTH TOLERANCE IS ± 0.05 INCHES. FOR CABLE LENGTHS GREATER THAN 5 INCHES, USE ±1% FOR BOTH.

TABLE 1						
No. OF POSITIONS	"A"	"B"	QCD-XX-01	QCD-XX-02	QTY OF SUB-TCF	SUB-SQCD-X-XXX-XX-XX
-025	1.175[29.85]	1.078[27.38]	QCD-01-01	QCD-01-02	2	SUB-SQCD-X-025-XX-XX
-050	1.963[49.85]	1.866[47.40]	QCD-02-01	QCD-02-02	4	SUB-SQCD-X-050-XX-XX
-075	2.750[69.85]	2.653[67.39]	QCD-03-01	QCD-03-02	6	SUB-SQCD-X-075-XX-XX
-100	3.538[89.85]	3.441[87.39]	QCD-04-01	QCD-04-02	8	SUB-SQCD-X-100-XX-XX

TABLE 3		
No. OF POSITIONS	N	N-1
-025	50	49
-050	100	99
-075	150	149
-100	200	199

F:\DWG\MISC\MKTG\SQCD-XXX-XX.XX-XXX-XXX-X-X-MKT.SLDDRW

UNLESS OTHERWISE SPECIFIED, DIMENSIONS ARE IN INCHES.

TOLERANCES ARE:
DECIMALS
.XX: ±.01[0.3]
.XXX: ±.005[0.13]
.XXXX: ±.0020[0.051]
ANGLES
2 °

* PROPRIETARY NOTE *
THIS DOCUMENT CONTAINS CONFIDENTIAL AND PROPRIETARY INFORMATION AND ALL DESIGN, MANUFACTURING, REPRODUCTION, USE, PATENT RIGHTS AND SALES RIGHTS ARE EXPRESSLY RESERVED BY SAMTEC, INC. THIS DOCUMENT SHALL NOT BE DISCLOSED, IN WHOLE OR PART, TO ANY UNAUTHORIZED PERSON OR ENTITY NOR REPRODUCED, TRANSFERRED OR INCORPORATED IN ANY OTHER PROJECT IN ANY MANNER WITHOUT THE EXPRESS WRITTEN CONSENT OF SAMTEC, INC.

samtec
520 PARK EAST BLVD, NEW ALBANY, IN 47150
PHONE: 812-944-6733 FAX: 812-948-5047
e-Mail: info@SAMTEC.com code: 55322

MATERIAL:
PLATING:
-H GOLD: 30µ" CONTACT

DO NOT SCALE DRAWING

SHEET SCALE: 1:0.8

DESCRIPTION:
0.635mm HIGH-SPEED COAX CABLE ASSEMBLY

DWG. NO.
SQCD-XXX-XX.XX-XXX-XXX-X-X

BY: CUMMINGS 09/06/05 SHEET 1 OF 7

REVISION T

FIRST END - VERTICAL (SEE TABLE 9, SHEET 7)

-TTR

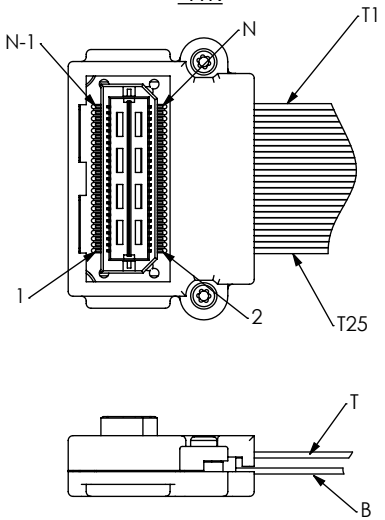

WIRING OPTION	FIRST END PIN #	SECOND END PIN #	WIRE NUMBER
1	1	1	B25
2	1	2	B25
3	1	N-1	B25
4	1	N	B25

-TTL

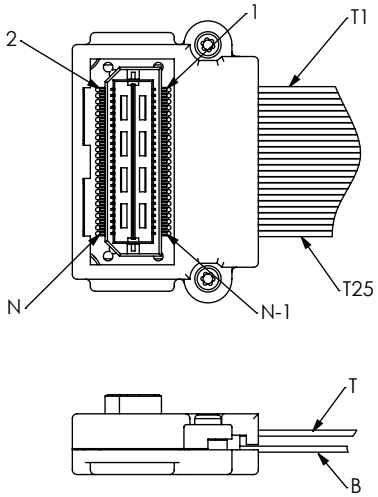

WIRING OPTION	FIRST END PIN #	SECOND END PIN #	WIRE NUMBER
1	1	1	T1
2	1	2	T1
3	1	N-1	T1
4	1	N	T1

-TBR

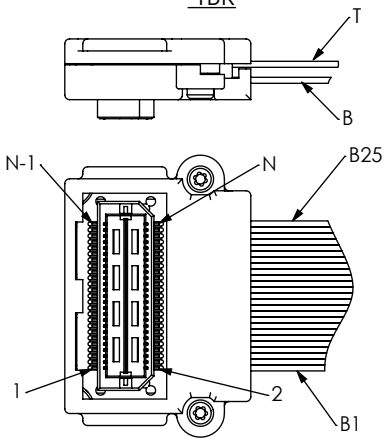

WIRING OPTION	FIRST END PIN #	SECOND END PIN #	WIRE NUMBER
1	1	1	T1
2	1	2	T1
3	1	N-1	T1
4	1	N	T1

-TBL

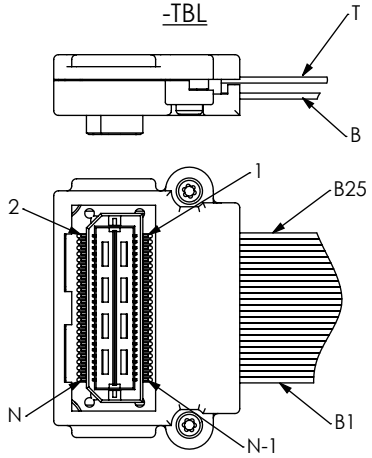

WIRING OPTION	FIRST END PIN #	SECOND END PIN #	WIRE NUMBER
1	1	1	B25
2	1	2	B25
3	1	N-1	B25
4	1	N	B25

-STR

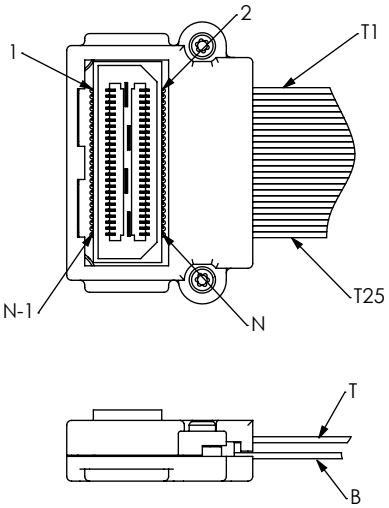

WIRING OPTION	FIRST END PIN #	SECOND END PIN #	WIRE NUMBER
1	1	1	B1
2	1	2	B1
3	1	N-1	B1
4	1	N	B1

-STL

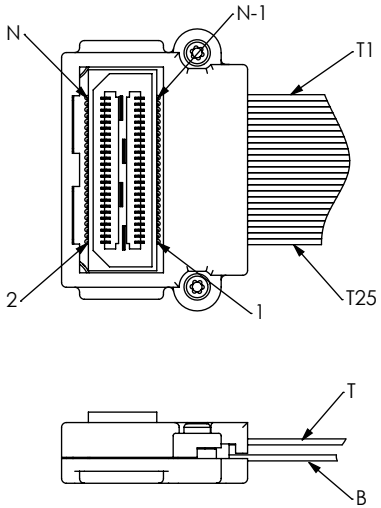

WIRING OPTION	FIRST END PIN #	SECOND END PIN #	WIRE NUMBER
1	1	1	T25
2	1	2	T25
3	1	N-1	T25
4	1	N	T25

-SBR

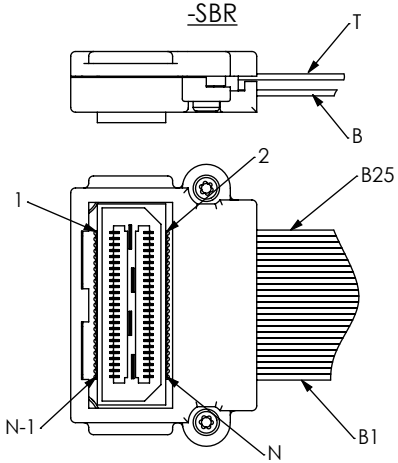

WIRING OPTION	FIRST END PIN #	SECOND END PIN #	WIRE NUMBER
1	1	1	T25
2	1	2	T25
3	1	N-1	T25
4	1	N	T25

-SBL

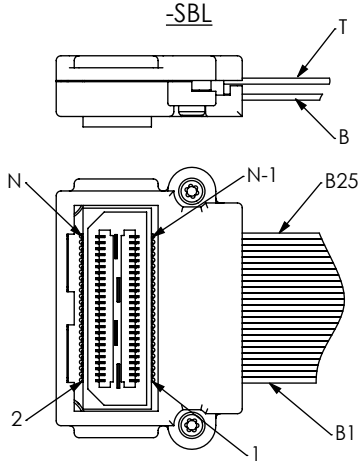

WIRING OPTION	FIRST END PIN #	SECOND END PIN #	WIRE NUMBER
1	1	1	B1
2	1	2	B1
3	1	N-1	B1
4	1	N	B1

* PROPRIETARY NOTE *

THIS DOCUMENT CONTAINS CONFIDENTIAL AND PROPRIETARY INFORMATION AND ALL DESIGN, MANUFACTURING, REPRODUCTION, USE, PATENT RIGHTS AND SALES RIGHTS ARE EXPRESSLY RESERVED BY SAMTEC, INC. THIS DOCUMENT SHALL NOT BE DISCLOSED, IN WHOLE OR PART, TO ANY UNAUTHORIZED PERSON OR ENTITY NOR REPRODUCED, TRANSFERRED OR INCORPORATED IN ANY OTHER PROJECT IN ANY MANNER WITHOUT THE EXPRESS WRITTEN CONSENT OF SAMTEC, INC.

DO NOT SCALE DRAWING

SHEET SCALE: 1.25:1

samtec

520 PARK EAST BLVD, NEW ALBANY, IN 47150
PHONE: 812-944-6733 FAX: 812-948-5047
e-Mail: info@SAMTEC.com code: 55322

DESCRIPTION:
0.635mm HIGH-SPEED COAX CABLE ASSEMBLY

DWG. NO.
SQCD-XXX-XX.XX-XXX-XXX-X-X

BY: CUMMINGS 09/06/05 SHEET 2 OF 7

F:\DWG\MISC\MKTG\SQCD-XXX-XX.XX-XXX-XXX-X-X-MKT.SLDDRW

REVISION T

SECOND END - VERTICAL (SEE TABLE 9, SHEET 7)

-TTR

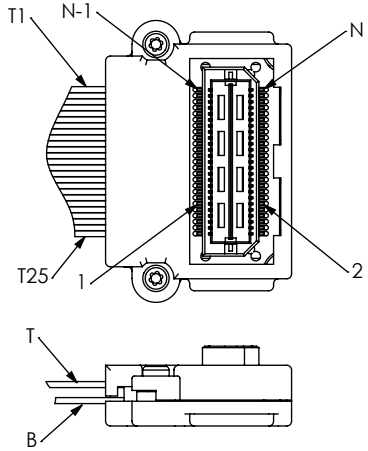

WIRING OPTION	FIRST END PIN #	SECOND END PIN #
1	1	1
2	1	2
3	1	N-1
4	1	N

-TTL

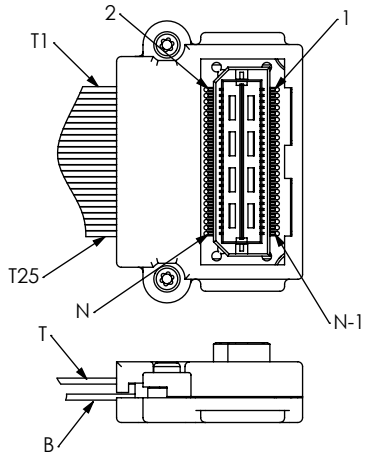

WIRING OPTION	FIRST END PIN #	SECOND END PIN #
1	1	1
2	1	2
3	1	N-1
4	1	N

-TBR

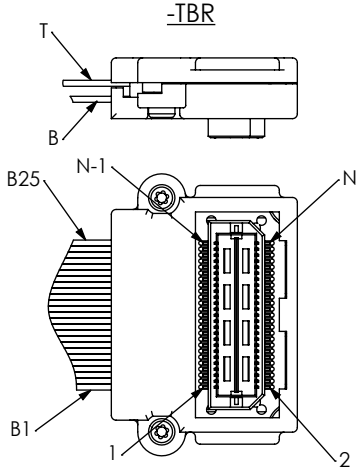

WIRING OPTION	FIRST END PIN #	SECOND END PIN #
1	1	1
2	1	2
3	1	N-1
4	1	N

-TBL

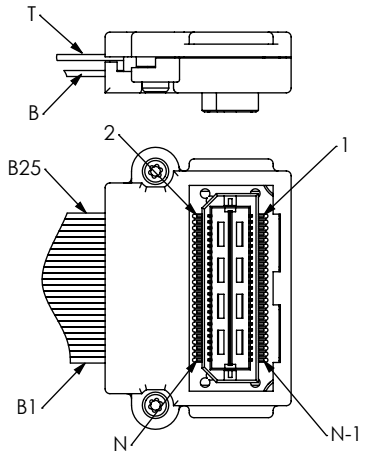

WIRING OPTION	FIRST END PIN #	SECOND END PIN #
1	1	1
2	1	2
3	1	N-1
4	1	N

-STR

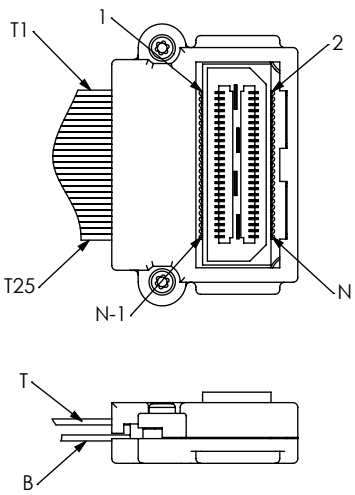

WIRING OPTION	FIRST END PIN #	SECOND END PIN #
1	1	1
2	1	2
3	1	N-1
4	1	N

-STL

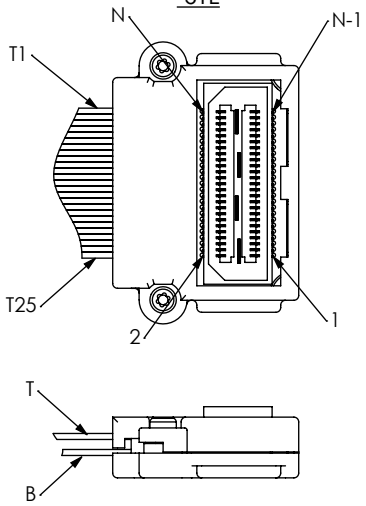

WIRING OPTION	FIRST END PIN #	SECOND END PIN #
1	1	1
2	1	2
3	1	N-1
4	1	N

-SBR

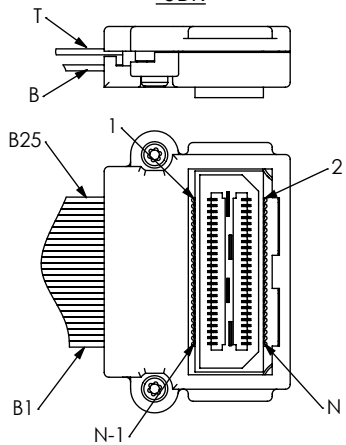

WIRING OPTION	FIRST END PIN #	SECOND END PIN #
1	1	1
2	1	2
3	1	N-1
4	1	N

-SBL

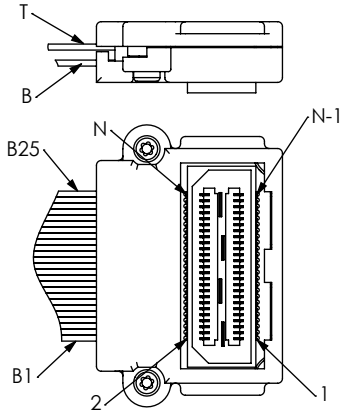

WIRING OPTION	FIRST END PIN #	SECOND END PIN #
1	1	1
2	1	2
3	1	N-1
4	1	N

* PROPRIETARY NOTE *

THIS DOCUMENT CONTAINS CONFIDENTIAL AND PROPRIETARY INFORMATION AND ALL DESIGN, MANUFACTURING, REPRODUCTION, USE, PATENT RIGHTS AND SALES RIGHTS ARE EXPRESSLY RESERVED BY SAMTEC, INC. THIS DOCUMENT SHALL NOT BE DISCLOSED, IN WHOLE OR PART, TO ANY UNAUTHORIZED PERSON OR ENTITY NOR REPRODUCED, TRANSFERRED OR INCORPORATED IN ANY OTHER PROJECT IN ANY MANNER WITHOUT THE EXPRESS WRITTEN CONSENT OF SAMTEC, INC.

DO NOT SCALE DRAWING

SHEET SCALE: 1.25:1

samtec

520 PARK EAST BLVD, NEW ALBANY, IN 47150
PHONE: 812-944-6733 FAX: 812-948-5047
e-Mail: info@SAMTEC.com code: 55322

DESCRIPTION:
0.635mm HIGH-SPEED COAX CABLE ASSEMBLY

DWG. NO.
SQCD-XXX-XX.XX-XXX-XXX-X-X

BY: CUMMINGS 09/06/05 SHEET 3 OF 7

F:\DWG\MISC\MKTG\SQCD-XXX-XX.XX-XXX-XXX-X-X-MKT.SLDDRW

REVISION T

FIRST END - EDGE MOUNT (SEE TABLE 9, SHEET 7)

-TEU

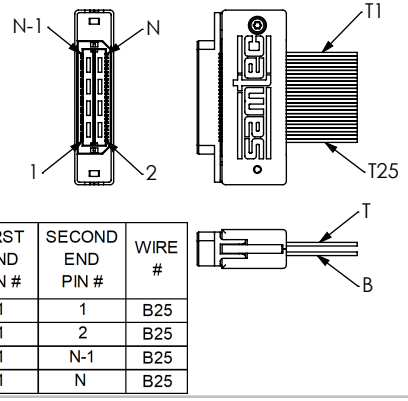

WIRING OPTION	FIRST END PIN #	SECOND END PIN #	WIRE #
1	1	1	B25
2	1	2	B25
3	1	N-1	B25
4	1	N	B25

WIRING OPTION	FIRST END PIN #	SECOND END PIN #	WIRE #
1	1	1	T1
2	1	2	T1
3	1	N-1	T1
4	1	N	T1

-TED

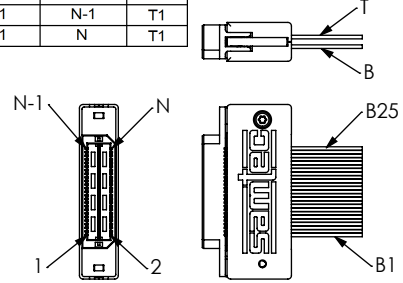

-SEU

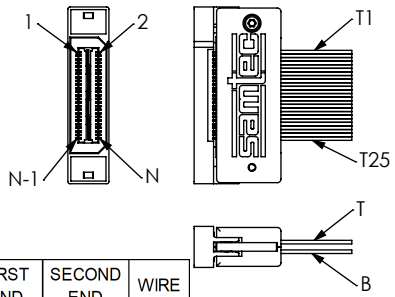

WIRING OPTION	FIRST END PIN #	SECOND END PIN #	WIRE #
1	1	1	B1
2	1	2	B1
3	1	N-1	B1
4	1	N	B1

WIRING OPTION	FIRST END PIN #	SECOND END PIN #	WIRE #
1	1	1	T25
2	1	2	T25
3	1	N-1	T25
4	1	N	T25

-SED

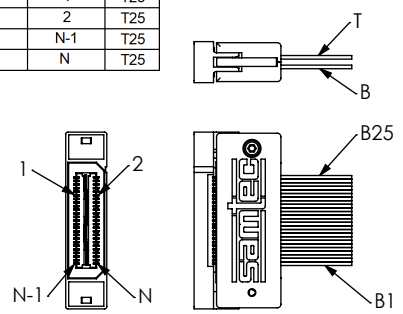

SECOND END - EDGE MOUNT (SEE TABLE 9, SHEET 7)

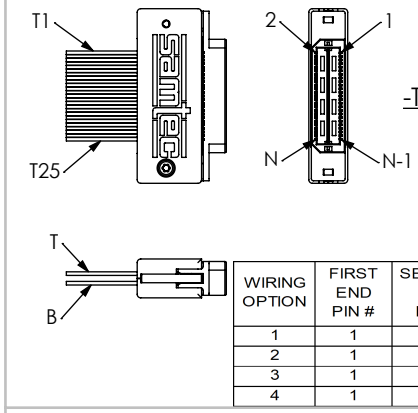

-TEU

WIRING OPTION	FIRST END PIN #	SECOND END PIN #
1	1	1
2	1	2
3	1	N-1
4	1	N

-TED

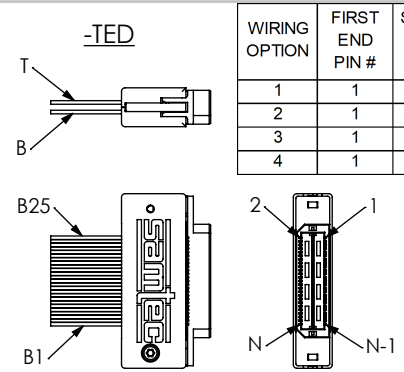

WIRING OPTION	FIRST END PIN #	SECOND END PIN #
1	1	1
2	1	2
3	1	N-1
4	1	N

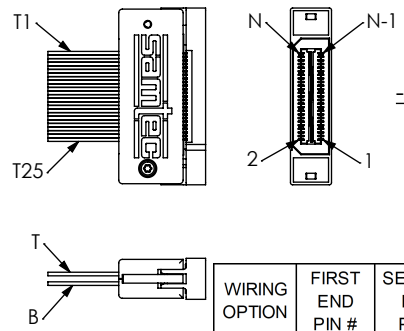

-SEU

WIRING OPTION	FIRST END PIN #	SECOND END PIN #
1	1	1
2	1	2
3	1	N-1
4	1	N

-SED

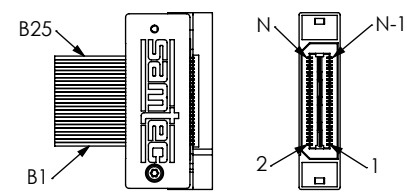

WIRING OPTION	FIRST END PIN #	SECOND END PIN #
1	1	1
2	1	2
3	1	N-1
4	1	N

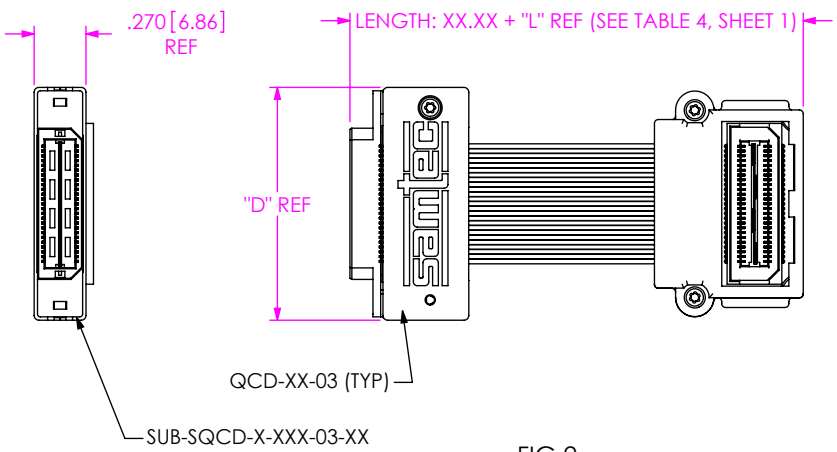

FIG 2
EDGE MOUNT (NO CAPTIVE PANEL SCREWS)
(SQCD-025-XX.XX-TEU-STR-X SHOWN)
(SAME AS FIG 1, UNLESS OTHERWISE STATED)

TABLE 5

No. OF POSITIONS	"D"	QCD-XXX-03	SUB-SQCD-X-XXX-XX-XX
-025	1.213[30.80]	QCD-01-03	SUB-SQCD-X-025-03-XX
-050	2.000[50.80]	QCD-02-03	SUB-SQCD-X-050-03-XX
-075	2.788[70.80]	QCD-03-03	SUB-SQCD-X-075-03-XX
-100	3.575[90.80]	QCD-04-03	SUB-SQCD-X-100-03-XX

* PROPRIETARY NOTE *

THIS DOCUMENT CONTAINS CONFIDENTIAL AND PROPRIETARY INFORMATION AND ALL DESIGN, MANUFACTURING, REPRODUCTION, USE, PATENT RIGHTS AND SALES RIGHTS ARE EXPRESSLY RESERVED BY SAMTEC, INC. THIS DOCUMENT SHALL NOT BE DISCLOSED, IN WHOLE OR PART, TO ANY UNAUTHORIZED PERSON OR ENTITY NOR REPRODUCED, TRANSFERRED OR INCORPORATED IN ANY OTHER PROJECT IN ANY MANNER WITHOUT THE EXPRESS WRITTEN CONSENT OF SAMTEC, INC.

DO NOT SCALE DRAWING

SHEET SCALE: 1:1

520 PARK EAST BLVD, NEW ALBANY, IN 47150
PHONE: 812-944-6733 FAX: 812-948-5047
e-Mail: info@SAMTEC.com code: 55322

DESCRIPTION:
0.635mm HIGH-SPEED COAX CABLE ASSEMBLY

DWG. NO.
SQCD-XXX-XX.XX-XXX-XXX-X-X

BY: CUMMINGS 09/06/05 SHEET 4 OF 7

F:\DWG\MISC\MKTG\SQCD-XXX-XX.XX-XXX-XXX-X-X-MKT.SLDDRW

REVISION T

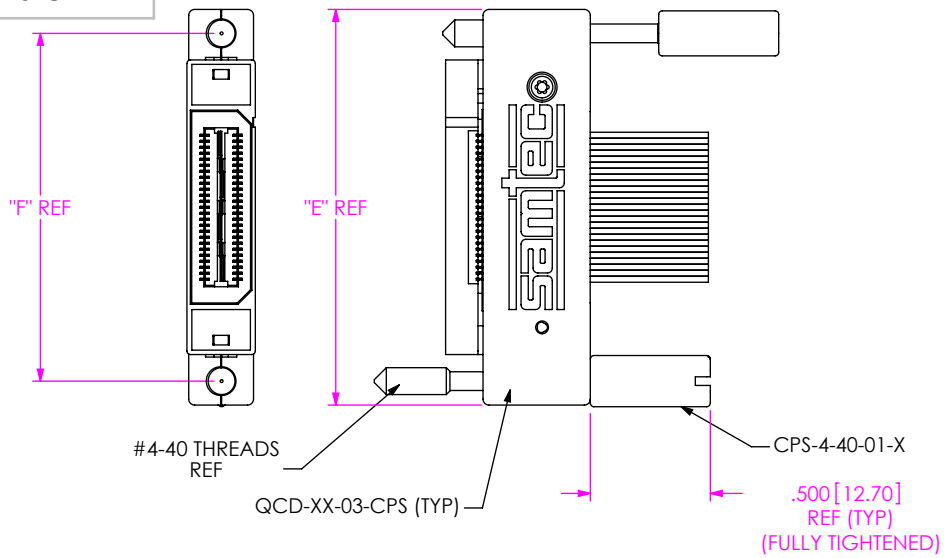

FIG 3
EDGE MOUNT (WITH CAPTIVE PANEL SCREWS)
(SQCD-025-XX.XX-SEU-XXX-1-F SHOWN)
(SAME AS FIG 2, UNLESS OTHERWISE STATED)

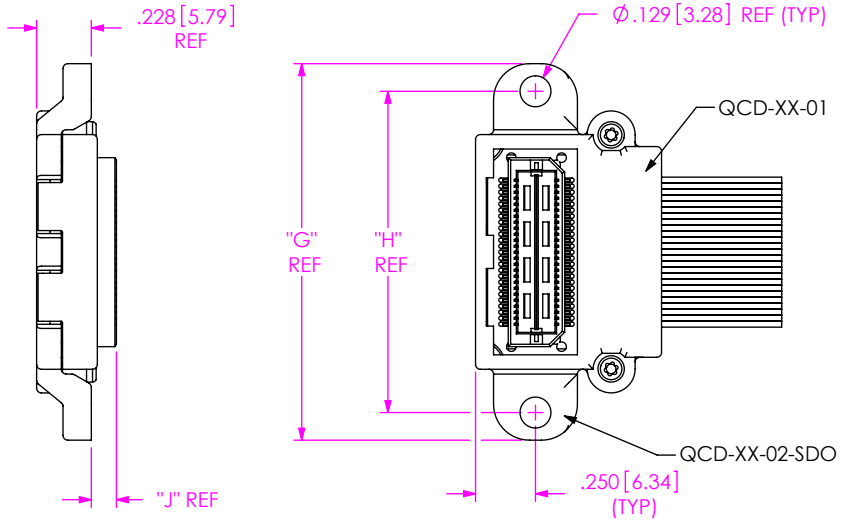

FIG 4
DOUBLE VERTICAL (WITH SCREW DOWN OPTION)
(SQCD-025-XX.XX-TTR-XXX-1-F SHOWN)
(SAME AS FIG 1, UNLESS OTHERWISE STATED)

TABLE 6

No. OF POSITIONS	"E"	"F"	QCD-XX-03-CPS
-025	1.649[41.87]	1.449[36.80]	QCD-01-03-CPS
-050	2.436[61.87]	2.237[56.80]	QCD-02-03-CPS
-075	3.224[81.87]	3.024[76.80]	QCD-03-03-CPS
-100	4.011[101.87]	3.812[96.80]	QCD-04-03-CPS

TABLE 7

No. OF POSITIONS	"G"	"H"	QCD-XX-02-SDO
-025	1.579[40.10]	1.339[34.00]	QCD-01-02-SDO
-050	2.366[60.10]	2.126[54.00]	QCD-02-02-SDO
-075	3.154[80.10]	2.913[74.00]	QCD-03-02-SDO
-100	3.941[100.10]	3.701[94.00]	QCD-04-02-SDO

TABLE 8

END	"J"
-TXX	.104[2.65]
-SXX	.068[1.73]

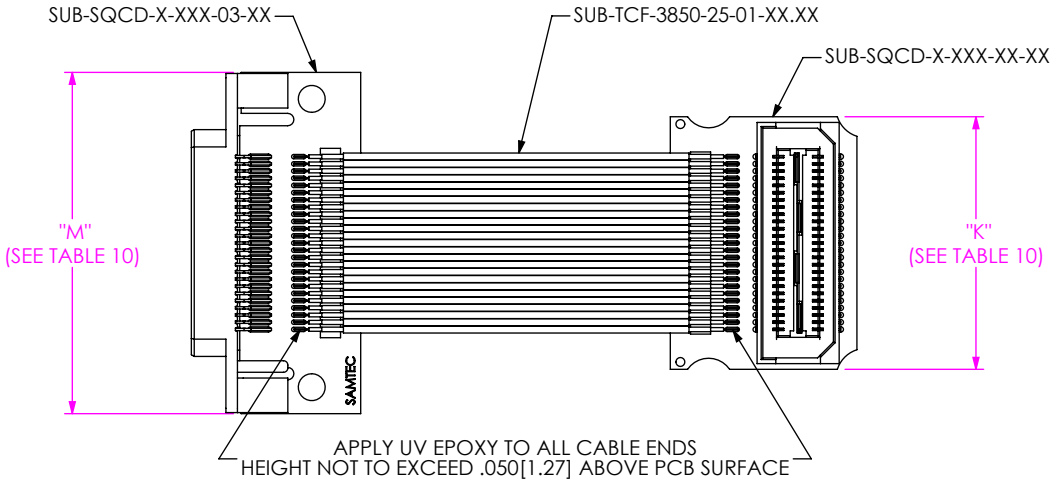

FIG 5
(SQCD-025-XX.XX-TEU-STR-X-N SHOWN)
(SAME AS FIG 1, UNLESS OTHERWISE STATED)

TABLE 10

No OF POSITIONS	"K"	"M"
025	0.877 [22.28]	1.1850 [30.10]
050	1.665 [42.29]	1.9730 [50.11]
075	2.453 [62.31]	2.7600 [70.10]
100	3.240 [82.30]	3.5480 [90.12]

* PROPRIETARY NOTE *
THIS DOCUMENT CONTAINS CONFIDENTIAL AND PROPRIETARY INFORMATION AND ALL DESIGN, MANUFACTURING, REPRODUCTION, USE, PATENT RIGHTS AND SALES RIGHTS ARE EXPRESSLY RESERVED BY SAMTEC, INC. THIS DOCUMENT SHALL NOT BE DISCLOSED, IN WHOLE OR PART, TO ANY UNAUTHORIZED PERSON OR ENTITY NOR REPRODUCED, TRANSFERRED OR INCORPORATED IN ANY OTHER PROJECT IN ANY MANNER WITHOUT THE EXPRESS WRITTEN CONSENT OF SAMTEC, INC.

DO NOT SCALE DRAWING

SHEET SCALE: 1.25:1

520 PARK EAST BLVD, NEW ALBANY, IN 47150
PHONE: 812-944-6733 FAX: 812-948-5047
e-Mail: info@SAMTEC.com code: 55322

DESCRIPTION:
0.635mm HIGH-SPEED COAX CABLE ASSEMBLY

DWG. NO.
SQCD-XXX-XX.XX-XXX-XXX-X-X

BY: CUMMINGS 09/06/05 SHEET 5 OF 7

F:\DWG\MISC\MKTG\SQCD-XXX-XX.XX-XXX-XXX-X-X-MKT.SLDDRW

REVISION T

FIRST END - PANEL MOUNT (SEE TABLE 9, SHEET 7)

-SPU

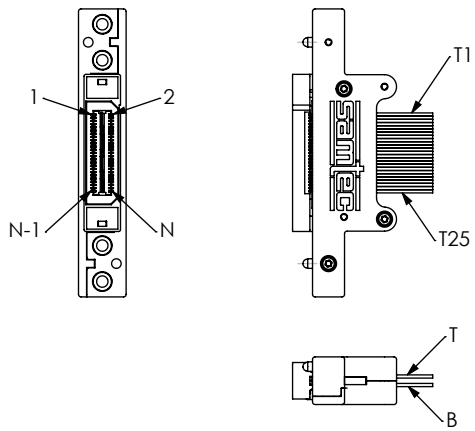

WIRING OPTION	FIRST END PIN #	SECOND END PIN #	WIRE #
1	1	1	B1
2	1	2	B1
3	1	N-1	B1
4	1	N	B1

-SPD

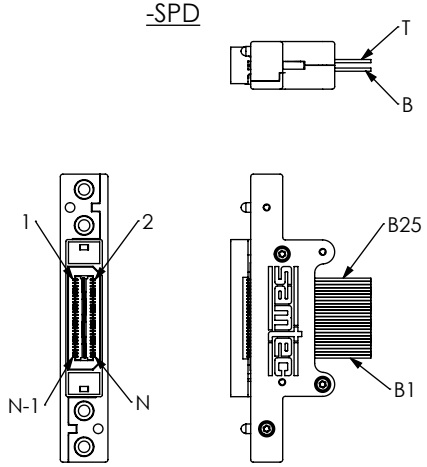

WIRING OPTION	FIRST END PIN #	SECOND END PIN #	WIRE #
1	1	1	T25
2	1	2	T25
3	1	N-1	T25
4	1	N	T25

-TPU

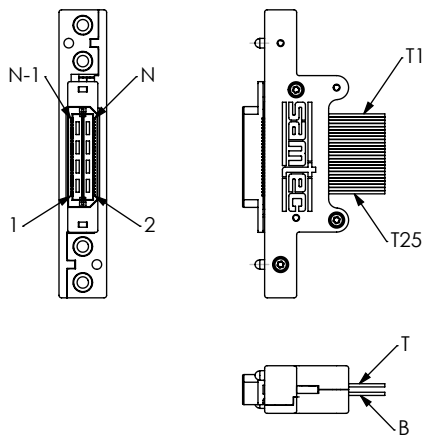

WIRING OPTION	FIRST END PIN #	SECOND END PIN #	WIRE #
1	1	1	B25
2	1	2	B25
3	1	N-1	B25
4	1	N	B25

-TPD

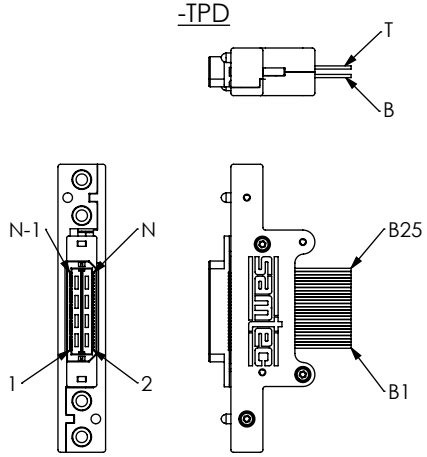

WIRING OPTION	FIRST END PIN #	SECOND END PIN #	WIRE #
1	1	1	T1
2	1	2	T1
3	1	N-1	T1
4	1	N	T1

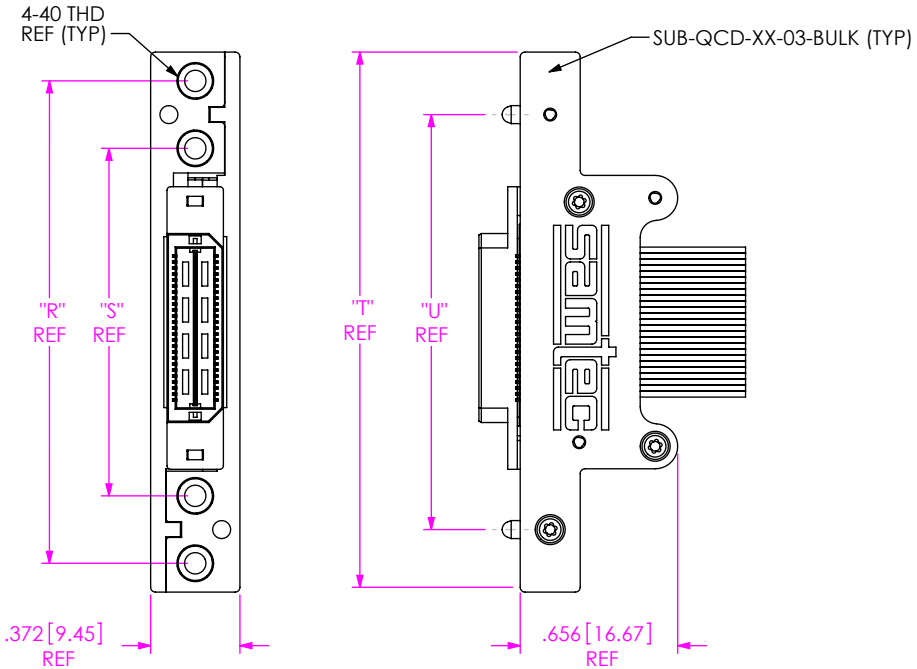

FIG 6
PANEL MOUNT (BULK HEAD SCREW INSERTS)
(SQCD-025-XX.XX-TPU-XXX-X SHOWN)
(SAME AS FIG. 2, UNLESS OTHERWISE STATED)

TABLE 11

No. OF POSITIONS	"R"		"S"		"T"		"U"		SUB-QCD-XXX-03-BULK
-025	2.010	[51.05]	1.449	[36.80]	2.250	[57.15]	1.730	[43.94]	SUB-QCD-01-03-BULK
-050	2.798	[71.07]	2.237	[56.82]	3.038	[77.17]	2.518	[63.96]	SUB-QCD-02-03-BULK
-075	3.586	[91.08]	3.024	[76.81]	3.826	[97.18]	3.306	[83.97]	SUB-QCD-03-03-BULK

* PROPRIETARY NOTE *

THIS DOCUMENT CONTAINS CONFIDENTIAL AND PROPRIETARY INFORMATION AND ALL DESIGN, MANUFACTURING, REPRODUCTION, USE, PATENT RIGHTS AND SALES RIGHTS ARE EXPRESSLY RESERVED BY SAMTEC, INC. THIS DOCUMENT SHALL NOT BE DISCLOSED, IN WHOLE OR PART, TO ANY UNAUTHORIZED PERSON OR ENTITY NOR REPRODUCED, TRANSFERRED OR INCORPORATED IN ANY OTHER PROJECT IN ANY MANNER WITHOUT THE EXPRESS WRITTEN CONSENT OF SAMTEC, INC.

DO NOT SCALE DRAWING

SHEET SCALE: 1.25:1

520 PARK EAST BLVD, NEW ALBANY, IN 47150
PHONE: 812-944-6733 FAX: 812-948-5047
e-Mail: info@SAMTEC.com code: 55322

DESCRIPTION:
0.635mm HIGH-SPEED COAX CABLE ASSEMBLY

DWG. NO.
SQCD-XXX-XX.XX-XXX-XXX-X-X

BY: CUMMINGS09/06/05

F:\DWG\MISC\MKTG\SQCD-XXX-XX.XX-XXX-XXX-X-X-MKT.SLDDRW

REVISION T

TABLE 9

FIRST END OPTION	FIRST END SUB-SQCD-X-XXX-XX-01	WIRING OPTION	FIRST END PIN #	SECOND END PIN #	WIRE #	SECOND END OPTION (SUB-SQCD-X-XXX-XX-XX) -TTR	-TTL	-TBR	-TBL	-STR	-STL	-SBR	-SBL	-TEU	-TED	-SEU	-SED
-TTR	-T-XXX-01-01	1	1	1	B25	-T-XXX-02-02	N/A	N/A	-T-XXX-01-02	N/A	-S-XXX-01-01	-S-XXX-02-01	N/A	N/A	-T-XXX-03-02	-S-XXX-03-01	N/A
		2	1	2	B25	-T-XXX-02-01	N/A	N/A	-T-XXX-01-01	N/A	-S-XXX-01-02	-S-XXX-02-02	N/A	N/A	-T-XXX-03-01	-S-XXX-03-02	N/A
		3	1	N-1	B25	N/A	-T-XXX-01-01	-T-XXX-02-01	N/A	-S-XXX-02-02	N/A	N/A	-S-XXX-01-02	-T-XXX-03-01	N/A	N/A	-S-XXX-03-02
		4	1	N	B25	N/A	-T-XXX-01-02	-T-XXX-02-02	N/A	-S-XXX-02-01	N/A	N/A	-S-XXX-01-01	-T-XXX-03-02	N/A	N/A	-S-XXX-03-01
-TTL	-T-XXX-02-01	1	1	1	T1	N/A	-T-XXX-01-02	-T-XXX-02-02	N/A	-S-XXX-02-01	N/A	N/A	-S-XXX-01-01	-T-XXX-03-02	N/A	N/A	-S-XXX-03-01
		2	1	2	T1	N/A	-T-XXX-01-01	-T-XXX-02-01	N/A	-S-XXX-02-02	N/A	N/A	-S-XXX-01-02	-T-XXX-03-01	N/A	N/A	-S-XXX-03-02
		3	1	N-1	T1	-T-XXX-02-01	N/A	N/A	-T-XXX-01-01	N/A	-S-XXX-01-02	-S-XXX-02-02	N/A	N/A	-T-XXX-03-01	-S-XXX-03-02	N/A
		4	1	N	T1	-T-XXX-02-02	N/A	N/A	-T-XXX-01-02	N/A	-S-XXX-01-01	-S-XXX-02-01	N/A	N/A	-T-XXX-03-02	-S-XXX-03-01	N/A
-TBR	-T-XXX-01-01	1	1	1	T1	N/A	-T-XXX-01-02	-T-XXX-02-02	N/A	-S-XXX-02-01	N/A	N/A	-S-XXX-01-01	-T-XXX-03-02	N/A	N/A	-S-XXX-03-01
		2	1	2	T1	N/A	-T-XXX-01-01	-T-XXX-02-01	N/A	-S-XXX-02-02	N/A	N/A	-S-XXX-01-02	-T-XXX-03-01	N/A	N/A	-S-XXX-03-02
		3	1	N-1	T1	-T-XXX-02-01	N/A	N/A	-T-XXX-01-01	N/A	-S-XXX-01-02	-S-XXX-02-02	N/A	N/A	-T-XXX-03-01	-S-XXX-03-02	N/A
		4	1	N	T1	-T-XXX-02-02	N/A	N/A	-T-XXX-01-02	N/A	-S-XXX-01-01	-S-XXX-02-01	N/A	N/A	-T-XXX-03-02	-S-XXX-03-01	N/A
-TBL	-T-XXX-02-01	1	1	1	B25	-T-XXX-02-02	N/A	N/A	-T-XXX-01-02	N/A	-S-XXX-01-01	-S-XXX-02-01	N/A	N/A	-T-XXX-03-02	-S-XXX-03-01	N/A
		2	1	2	B25	-T-XXX-02-01	N/A	N/A	-T-XXX-01-01	N/A	-S-XXX-01-02	-S-XXX-02-02	N/A	N/A	-T-XXX-03-01	-S-XXX-03-02	N/A
		3	1	N-1	B25	N/A	-T-XXX-01-01	-T-XXX-02-01	N/A	-S-XXX-02-02	N/A	N/A	-S-XXX-01-02	-T-XXX-03-01	N/A	N/A	-S-XXX-03-02
		4	1	N	B25	N/A	-T-XXX-01-02	-T-XXX-02-02	N/A	-S-XXX-02-01	N/A	N/A	-S-XXX-01-01	-T-XXX-03-02	N/A	N/A	-S-XXX-03-01
-STR	-S-XXX-01-01	1	1	1	B1	N/A	-T-XXX-01-01	-T-XXX-02-01	N/A	-S-XXX-02-02	N/A	N/A	-S-XXX-01-02	-T-XXX-03-01	N/A	N/A	-S-XXX-03-02
		2	1	2	B1	N/A	-T-XXX-01-02	-T-XXX-02-02	N/A	-S-XXX-02-01	N/A	N/A	-S-XXX-01-01	-T-XXX-03-02	N/A	N/A	-S-XXX-03-01
		3	1	N-1	B1	-T-XXX-02-02	N/A	N/A	-T-XXX-01-02	N/A	-S-XXX-01-01	-S-XXX-02-01	N/A	N/A	-T-XXX-03-02	-S-XXX-03-01	N/A
		4	1	N	B1	-T-XXX-02-01	N/A	N/A	-T-XXX-01-01	N/A	-S-XXX-01-02	-S-XXX-02-02	N/A	N/A	-T-XXX-03-01	-S-XXX-03-02	N/A
-STL	-S-XXX-02-01	1	1	1	T25	-T-XXX-02-01	N/A	N/A	-T-XXX-01-01	N/A	-S-XXX-01-02	-S-XXX-02-02	N/A	N/A	-T-XXX-03-01	-S-XXX-03-02	N/A
		2	1	2	T25	-T-XXX-02-02	N/A	N/A	-T-XXX-01-02	N/A	-S-XXX-01-01	-S-XXX-02-01	N/A	N/A	-T-XXX-03-02	-S-XXX-03-01	N/A
		3	1	N-1	T25	N/A	-T-XXX-01-02	-T-XXX-02-02	N/A	-S-XXX-02-01	N/A	N/A	-S-XXX-01-01	-T-XXX-03-02	N/A	N/A	-S-XXX-03-01
		4	1	N	T25	N/A	-T-XXX-01-01	-T-XXX-02-01	N/A	-S-XXX-02-02	N/A	N/A	-S-XXX-01-02	-T-XXX-03-01	N/A	N/A	-S-XXX-03-02
-SBR	-S-XXX-01-01	1	1	1	T25	-T-XXX-02-01	N/A	N/A	-T-XXX-01-01	N/A	-S-XXX-01-02	-S-XXX-02-02	N/A	N/A	-T-XXX-03-01	-S-XXX-03-02	N/A
		2	1	2	T25	-T-XXX-02-02	N/A	N/A	-T-XXX-01-02	N/A	-S-XXX-01-01	-S-XXX-02-01	N/A	N/A	-T-XXX-03-02	-S-XXX-03-01	N/A
		3	1	N-1	T25	N/A	-T-XXX-01-02	-T-XXX-02-02	N/A	-S-XXX-02-01	N/A	N/A	-S-XXX-01-01	-T-XXX-03-02	N/A	N/A	-S-XXX-03-01
		4	1	N	T25	N/A	-T-XXX-01-01	-T-XXX-02-01	N/A	-S-XXX-02-02	N/A	N/A	-S-XXX-01-02	-T-XXX-03-01	N/A	N/A	-S-XXX-03-02
-SBL	-S-XXX-02-01	1	1	1	B1	N/A	-T-XXX-01-01	-T-XXX-02-01	N/A	-S-XXX-02-02	N/A	N/A	-S-XXX-01-02	-T-XXX-03-01	N/A	N/A	-S-XXX-03-02
		2	1	2	B1	N/A	-T-XXX-01-02	-T-XXX-02-02	N/A	-S-XXX-02-01	N/A	N/A	-S-XXX-01-01	-T-XXX-03-02	N/A	N/A	-S-XXX-03-01
		3	1	N-1	B1	-T-XXX-02-02	N/A	N/A	-T-XXX-01-02	N/A	-S-XXX-01-01	-S-XXX-02-01	N/A	N/A	-T-XXX-03-02	-S-XXX-03-01	N/A
		4	1	N	B1	-T-XXX-02-01	N/A	N/A	-T-XXX-01-01	N/A	-S-XXX-01-02	-S-XXX-02-02	N/A	N/A	-T-XXX-03-01	-S-XXX-03-02	N/A
-TEU	-T-XXX-03-01	1	1	1	B25	-T-XXX-02-02	N/A	N/A	-T-XXX-01-02	N/A	-S-XXX-01-01	-S-XXX-02-01	N/A	N/A	-T-XXX-03-02	-S-XXX-03-01	N/A
		2	1	2	B25	-T-XXX-02-01	N/A	N/A	-T-XXX-01-01	N/A	-S-XXX-01-02	-S-XXX-02-02	N/A	N/A	-T-XXX-03-01	-S-XXX-03-02	N/A
		3	1	N-1	B25	N/A	-T-XXX-01-01	-T-XXX-02-01	N/A	-S-XXX-02-02	N/A	N/A	-S-XXX-01-02	-T-XXX-03-01	N/A	N/A	-S-XXX-03-02
		4	1	N	B25	N/A	-T-XXX-01-02	-T-XXX-02-02	N/A	-S-XXX-02-01	N/A	N/A	-S-XXX-01-01	-T-XXX-03-02	N/A	N/A	-S-XXX-03-01
-TED	-T-XXX-03-01	1	1	1	T1	N/A	-T-XXX-01-02	-T-XXX-02-02	N/A	-S-XXX-02-01	N/A	N/A	-S-XXX-01-01	-T-XXX-03-02	N/A	N/A	-S-XXX-03-01
		2	1	2	T1	N/A	-T-XXX-01-01	-T-XXX-02-01	N/A	-S-XXX-02-02	N/A	N/A	-S-XXX-01-02	-T-XXX-03-01	N/A	N/A	-S-XXX-03-02
		3	1	N-1	T1	-T-XXX-02-01	N/A	N/A	-T-XXX-01-01	N/A	-S-XXX-01-02	-S-XXX-02-02	N/A	N/A	-T-XXX-03-01	-S-XXX-03-02	N/A
		4	1	N	T1	-T-XXX-02-02	N/A	N/A	-T-XXX-01-02	N/A	-S-XXX-01-01	-S-XXX-02-01	N/A	N/A	-T-XXX-03-02	-S-XXX-03-01	N/A
-SEU	-S-XXX-03-01	1	1	1	B1	N/A	-T-XXX-01-01	-T-XXX-02-01	N/A	-S-XXX-02-02	N/A	N/A	-S-XXX-01-02	-T-XXX-03-01	N/A	N/A	-S-XXX-03-02
		2	1	2	B1	N/A	-T-XXX-01-02	-T-XXX-02-02	N/A	-S-XXX-02-01	N/A	N/A	-S-XXX-01-01	-T-XXX-03-02	N/A	N/A	-S-XXX-03-01
		3	1	N-1	B1	-T-XXX-02-02	N/A	N/A	-T-XXX-01-02	N/A	-S-XXX-01-01	-S-XXX-02-01	N/A	N/A	-T-XXX-03-02	-S-XXX-03-01	N/A
		4	1	N	B1	-T-XXX-02-01	N/A	N/A	-T-XXX-01-01	N/A	-S-XXX-01-02	-S-XXX-02-02	N/A	N/A	-T-XXX-03-01	-S-XXX-03-02	N/A
-SED	-S-XXX-03-01	1	1	1	T25	-T-XXX-02-01	N/A	N/A	-T-XXX-01-01	N/A	-S-XXX-01-02	-S-XXX-02-02	N/A	N/A	-T-XXX-03-01	-S-XXX-03-02	N/A
		2	1	2	T25	-T-XXX-02-02	N/A	N/A	-T-XXX-01-02	N/A	-S-XXX-01-01	-S-XXX-02-01	N/A	N/A	-T-XXX-03-02	-S-XXX-03-01	N/A
		3	1	N-1	T25	N/A	-T-XXX-01-02	-T-XXX-02-02	N/A	-S-XXX-02-01	N/A	N/A	-S-XXX-01-01	-T-XXX-03-02	N/A	N/A	-S-XXX-03-01
		4	1	N	T25	N/A	-T-XXX-01-01	-T-XXX-02-01	N/A	-S-XXX-02-02	N/A	N/A	-S-XXX-01-02	-T-XXX-03-01	N/A	N/A	-S-XXX-03-02
-TPU	-T-XXX-03-01	1	1	1	B25	-T-XXX-02-02	N/A	N/A	-T-XXX-01-02	N/A	-S-XXX-01-01	-S-XXX-02-01	N/A	N/A	-T-XXX-03-02	-S-XXX-03-01	N/A
		2	1	2	B25	-T-XXX-02-01	N/A	N/A	-T-XXX-01-01	N/A	-S-XXX-01-02	-S-XXX-02-02	N/A	N/A	-T-XXX-03-01	-S-XXX-03-02	N/A
		3	1	N-1	B25	N/A	-T-XXX-01-01	-T-XXX-02-01	N/A	-S-XXX-02-02	N/A	N/A	-S-XXX-01-02	-T-XXX-03-01	N/A	N/A	-S-XXX-03-02
		4	1	N	B25	N/A	-T-XXX-01-02	-T-XXX-02-02	N/A	-S-XXX-02-01	N/A	N/A	-S-XXX-01-01	-T-XXX-03-02	N/A	N/A	-S-XXX-03-01
-TPD	-T-XXX-03-01	1	1	1	T1	N/A	-T-XXX-01-02	-T-XXX-02-02	N/A	-S-XXX-02-01	N/A	N/A	-S-XXX-01-01	-T-XXX-03-02	N/A	N/A	-S-XXX-03-01
		2	1	2	T1	N/A	-T-XXX-01-01	-T-XXX-02-01	N/A	-S-XXX-02-02	N/A	N/A	-S-XXX-01-02	-T-XXX-03-01	N/A	N/A	-S-XXX-03-02
		3	1	N-1	T1	-T-XXX-02-01	N/A	N/A	-T-XXX-01-01	N/A	-S-XXX-01-02	-S-XXX-02-02	N/A	N/A	-T-XXX-03-01	-S-XXX-03-02	N/A
		4	1	N	T1	-T-XXX-02-02	N/A	N/A	-T-XXX-01-02	N/A	-S-XXX-01-01	-S-XXX-02-01	N/A	N/A	-T-XXX-03-02	-S-XXX-03-01	N/A
-SPU	-S-XXX-03-01	1	1	1	B1	N/A	-T-XXX-01-01	-T-XXX-02-01	N/A	-S-XXX-02-02	N/A	N/A	-S-XXX-01-02	-T-XXX-03-01	N/A	N/A	-S-XXX-03-02
		2	1	2	B1	N/A	-T-XXX-01-02	-T-XXX-02-02	N/A	-S-XXX-02-01	N/A	N/A	-S-XXX-01-01	-T-XXX-03-02	N/A	N/A	-S-XXX-03-01
		3	1	N-1	B1	-T-XXX-02-02	N/A	N/A	-T-XXX-01-02	N/A	-S-XXX-01-01	-S-XXX-02-01	N/A	N/A	-T-XXX-03-02	-S-XXX-03-01	N/A
		4	1	N	B1	-T-XXX-02-01	N/A	N/A	-T-XXX-01-01	N/A	-S-XXX-01-02	-S-XXX-02-02	N/A	N/A	-T-XXX-03-01	-S-XXX-03-02	N/A
-SPD	-S-XXX-03-01	1	1	1	T25	-T-XXX-02-01	N/A	N/A	-T-XXX-01-01	N/A	-S-XXX-01-02	-S-XXX-02-02	N/A	N/A	-T-XXX-03-01	-S-XXX-03-02	N/A
		2	1	2	T25	-T-XXX-02-02	N/A	N/A	-T-XXX-01-02	N/A	-S-XXX-01-01	-S-XXX-02-01	N/A	N/A	-T-XXX-03-02	-S-XXX-03-01	N/A
		3	1	N-1	T25	N/A	-T-XXX-01-02	-T-XXX-02-02	N/A	-S-XXX-02-01	N/A	N/A	-S-XXX-01-01	-T-XXX-03-02	N/A	N/A	-S-XXX-03-01
		4	1	N	T25	N/A	-T-XXX-01-01	-T-XXX-02-01	N/A	-S-XXX-02-02	N/A	N/A	-S-XXX-01-02	-T-XXX-03-01	N/A	N/A	-S-XXX-03-02

F:\DWG\MISC\MKTG\SQCD-XXX-XX.XX-XXX-XXX-X-X-MKT.SLDDRW

* PROPRIETARY NOTE *

THIS DOCUMENT CONTAINS CONFIDENTIAL AND PROPRIETARY INFORMATION AND ALL DESIGN, MANUFACTURING, REPRODUCTION, USE, PATENT RIGHTS AND SALES RIGHTS ARE EXPRESSLY RESERVED BY SAMTEC, INC. THIS DOCUMENT SHALL NOT BE DISCLOSED, IN WHOLE OR PART, TO ANY UNAUTHORIZED PERSON OR ENTITY NOR REPRODUCED, TRANSFERRED OR INCORPORATED IN ANY OTHER PROJECT IN ANY MANNER WITHOUT THE EXPRESS WRITTEN CONSENT OF SAMTEC, INC.

DO NOT SCALE DRAWING

SHEET SCALE: 1.25:1

samtec

520 PARK EAST BLVD, NEW ALBANY, IN 47150
PHONE: 812-944-6733 FAX: 812-948-5047
e-Mail: info@SAMTEC.com code: 55322

DESCRIPTION:
0.635mm HIGH-SPEED COAX CABLE ASSEMBLY

DWG. NO.
SQCD-XXX-XX.XX-XXX-XXX-X-X

BY: CUMMINGS 09/06/05 SHEET 7 OF 7

Looking for pricing, stock, or lifecycle information?

Click below to explore more details on WIN SOURCE:

- View SQCD-025-12.00-STR-TEU-1-S on WIN SOURCE
- Samtec Inc. Information

Optimize Your Supply Chain with WIN SOURCE Solutions

- Global Sourcing Solution
- Obsolete Management
- Cost Control Management
- Shortage Management
- Alternative Solution
- Excess Inventory Management