THE DATASHEET OF

ECS-.327-6-17X-TR

RoHS COMPLIANT

The ECX-306X is a compact SMD Tuning Fork Crystal. The 3.8 x 8.0 x 2.5 mm package is ideal for communications and measuring equipment.

ECX-306X SMD CRYSTAL

Request a Sample

ECS INC INTERNATIONAL®

ECX-306X SMD CRYSTAL

- Low Profile
- Long Term Stability
- Industry Standard Footprint
- Extended Temp. Range
- RoHS Compliant
- Low Power RTC Applications such as STM32 AN2867

OPERATING CONDITIONS / ELECTRICAL CHARACTERISTICS

PARAMETERS	CONDITIONS	ECX-306X			UNITS
		MIN	TYP	MAX	
Frequency	Fo		32.768		KHz
Frequency Tolerance	@ +25°C			± 20 *	ppm
Load Capacitance	Specify in P/N		12.5		pF
Drive Level	DL			1.0	µW
Equivalent Series Resistance	R1			50K	Ω
Turnover Temperature		+20	+25	+30	°C
Temperature Coefficient		-0.028	-0.034	-0.040	ppm/°C²
Shunt Capacitance	Co		1.35		pF
Aging (First Year)	@ +25°C ±3°C			±3	ppm
Operating Temperature	Topr	-40		+85	°C
Storage Temperature	Tstg	-55		+125	°C
Insulation Resistance	@ 100V DC	500M			Ω

DIMENSIONS (mm)

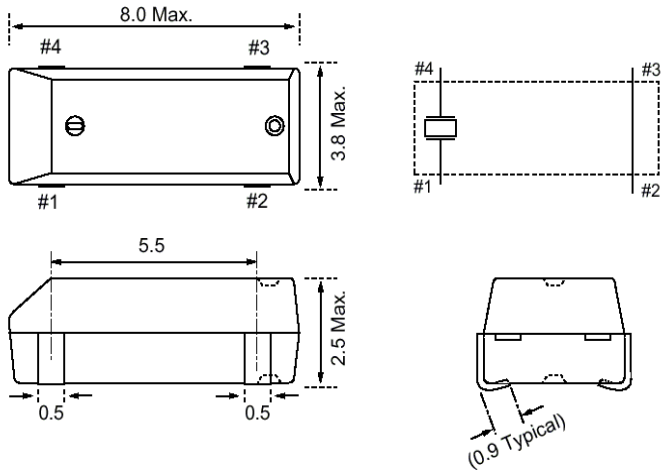

Figure 1) *Top, Side, and End views*

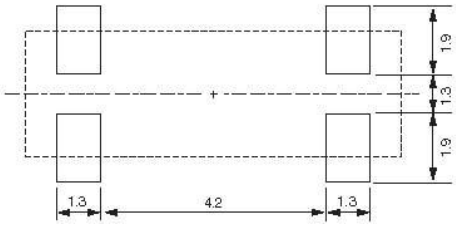

Figure 2) *Suggested Land Pattern*

PART NUMBERING GUIDE: Example ECS-.327-12.5-17X-TR

ECS -	FREQUENCY ABBREVIATION	LOAD CAPACITANCE	PACKAGE	CUSTOM OPTIONS Tolerance	PACKAGING
ECS	.327 = 32.768 KHz	12.5 = 12.5 pF 9 = 9 pF 7 = 7 pF 6 = 6 pF	17X = ECX-306X	Blank (Std) = ±20 ppm * C = ± 10 ppm	TR = Tape & Reel 3K/Reel

*Contact ECS for availability

Rev.2020

15351 West 109th Street | Lenexa, KS 66219 | Phone: 913.782.7787 | Fax: 913.782.6991 | www.ecsxtal.com

POCKET TAPE DIMENSIONS (mm)

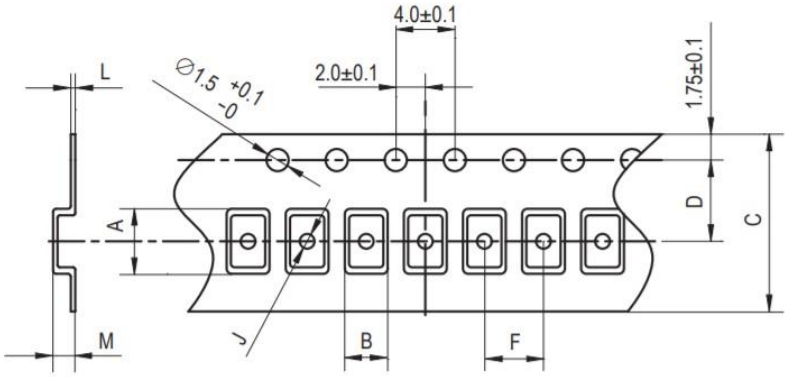

A	B	C	D	F	J	L	M	Reel Dia.	Qty/Reel
8.3	4.0	16.0	7.5	8.0	1.6	0.3	2.7	330	3000pcs

SOLDER PROFILE
Peak solder Temp +260°C Max 10 sec Max.
2 Cycles Max.
MSL 1, Lead Finish Sn/Ag

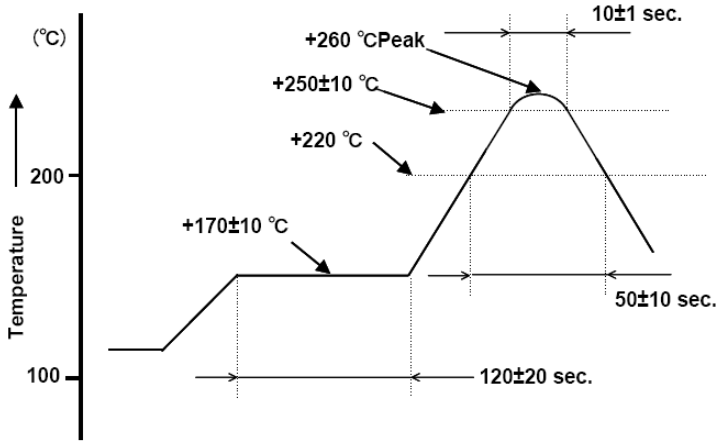

Figure 1) *Suggested Reflow Profile*

Looking for pricing, stock, or lifecycle information?

Click below to explore more details on WIN SOURCE:

- View ECS-.327-6-17X-TR on WIN SOURCE
- ECS Inc. Information

Optimize Your Supply Chain with WIN SOURCE Solutions

- Global Sourcing Solution
- Obsolete Management
- Cost Control Management
- Shortage Management
- Alternative Solution
- Excess Inventory Management