THE DATASHEET OF

SBR6045

www.win-source.net 0086-755-83957316

60 Amp Schottky Rectifier

SBR6035 – SBR6045

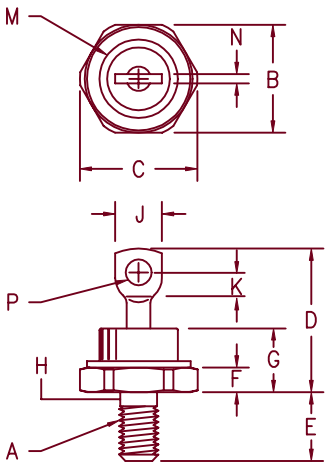

Notes:
1. Full threads within 2 1/2 threads
2. Standard Polarity: Stud is Cathode
   Reverse Polarity: Stud is Anode

Dim.	Inches		Millimeter		
	Minimum	Maximum	Minimum	Maximum	Notes
A	---	---	---	---	1/4–28
B	.669	.688	17.00	17.47	
C	---	.794	---	20.16	
D	.750	1.00	19.05	25.40	
E	.422	.453	10.72	11.50	
F	.115	.200	2.93	5.08	
G	---	.450	---	11.43	
H	.220	.249	5.59	6.32	1
J	---	.375	---	9.52	
K	.156	---	3.97	---	
M	---	.510	---	12.95	Dia
N	---	.080	---	2.03	
P	.140	.175	3.56	4.44	Dia

DO–203AB (DO–5)

Microsemi Catalog Number	Industry Part Number	Working Peak Reverse Voltage	Peak Reverse Voltage
SBR6035*	50HQ035, 51HQ035 MBR6035	35V	35V
SBR6040*	50HQ040, 51HQ040 MBR6040	40V	40V
SBR6045*	50HQ045, 51HQ045 MBR6045	45V	45V

*Add Suffix R For Reverse Polarity

- Schottky Barrier Rectifer
- Low forward voltage
- Guard Ring Protected
- Reverse Energy Tested
- 150°C Junction Temperature
- V_{RRM} –35 to 45 Volts

Electrical Characteristics

Average forward current per leg	$I_{F(AV)}$ 60 Amps	T_C = 102°C, Square wave, $R_{\theta JC}$ = 1.0°C/W
Maximum surge current per leg	I_{FSM} 1000 Amps	8.3ms, half sine, T_J = 125°C
Max repetitive peak reverse current	$I_{R(OV)}$ 2 Amp	f = 1 KHz, 25°C, 1 μsec Square wave
Max peak forward voltage	V_{FM} .58 Volts	I_{FM} = 60A: 125°C *
Max peak forward voltage	V_{FM} .60 Volts	I_{FM} = 60A: 25°C *
Max peak reverse current	I_{RM} 600 mA	V_{RRM}, T_J = 125°C *
Max peak reverse current	I_{RM} 2.0 mA	V_{RRM}, T_J = 25°C
Typical junction capacitance	C_J 2700 pF	V_R = 5.0V, T_J = 25°C

*Pulse test: Pulse width 300 μsec, Duty cycle 2%

Thermal and Mechanical Characteristics

Storage temp range	T_{STG}	–65°C to 175°C
Operating junction temp range	T_J	–65°C to 150°C
Max thermal resistance	$R_{\theta JC}$	1.0°C/W Junction to Case
Typical thermal resistance (greased)	$R_{\theta CS}$	0.5°C/W Case to sink
Mounting torque		25–30 inch pounds
Weight		.54 ounces (15.3 grams) typical

COLORADO Microsemi
800 Hoyt Street
Broomfield, CO. 80020
PH: (303) 469–2161
FAX: (303) 466–3775
www.microsemi.com

12–20–01 Rev. 3

SBR6035 – SBR6045

Figure 1
Typical Forward Characteristics

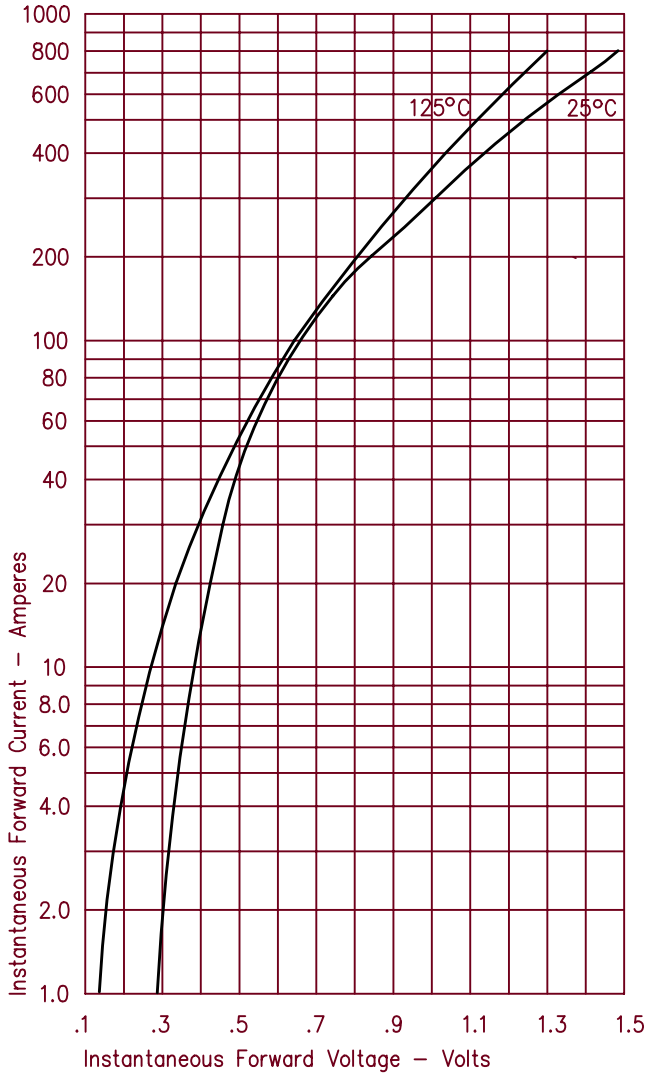

Figure 3
Typical Junction Capacitance

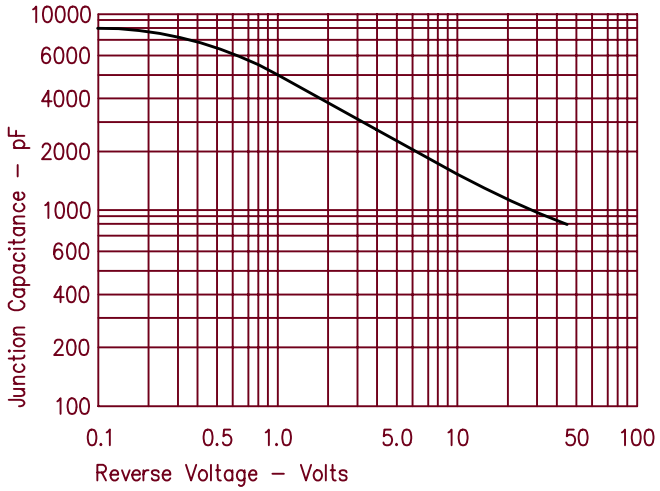

Figure 4
Forward Current Derating

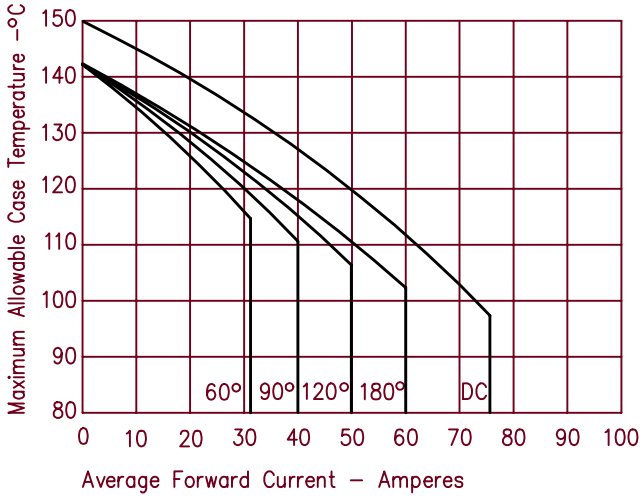

Figure 2
Typical Reverse Characteristics

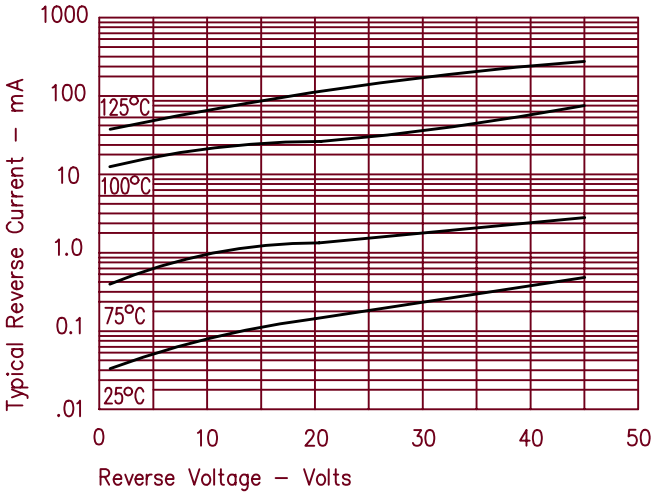

Figure 5
Maximum Forward Power Dissipation

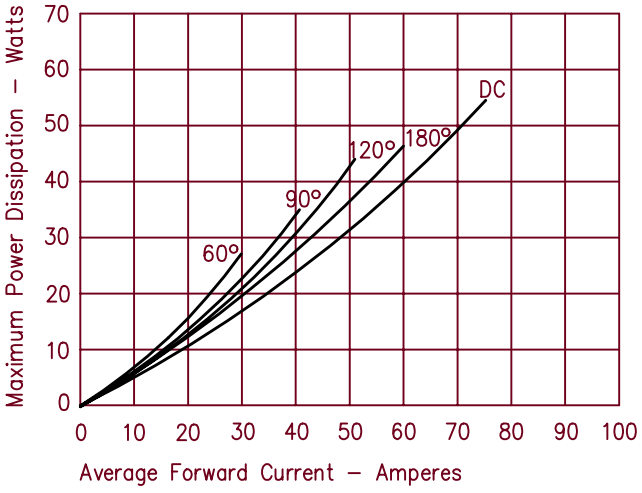

Looking for pricing, stock, or lifecycle information?

Click below to explore more details on WIN SOURCE:

- View SBR6045 on WIN SOURCE
- Microchip Technology Information

Optimize Your Supply Chain with WIN SOURCE Solutions

- Global Sourcing Solution
- Obsolete Management
- Cost Control Management
- Shortage Management
- Alternative Solution
- Excess Inventory Management