# THE DATASHEET OF

# SIP110-PPPC-D13-ST-BK

www.win-source.net 0086-755-83957316

# .100" [2.54 mm] Contact Centers, IDC Dip Plug Straight - SIP110 Series

## SPECIFICATIONS

- Operating Temperature: -40°C to +105°C
- Current Rating: 1 Amp
- Dielectric Withstanding: 1,000 VAC
- Insulation Resistance: 5,000 Megohms
- For .050" [1.27 mm] Pitch AWG 26-28 Flat Ribbon Cable
- UL Flammability Rating: 94V-0

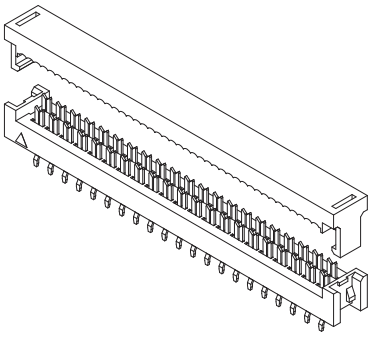

## PART NUMBER OPTIONS

**SIP110 - P P P C - D 10 - ST - BK**

**SERIES**
SIP110 = IDC Dip Plug

**INSULATOR MATERIAL**
P = PBT

**CONTACT MATERIAL**
P = Phosphor Bronze

**CONTACT FINISH - RoHS Compliant**
P = Gold Flash Overall
E = .000100" Pure Tin, Matte, Overall
V = Gold Flash on Contact Surface, Nickel on Termination
J = .000015" Gold on Contact Surface, Gold Flash on Termination
K = .000015" Gold on Contact Surface, Nickel on Termination

**CONTACT CENTERS**
C = .100" [2.54 mm]

**NUMBER OF ROWS**
D = Dual Row

**NUMBER OF CONTACT POSITIONS**
03 thru 10, 12, 13, 14, 15, 17, 20, 25, 30, 32

**TERMINATION TYPE**
ST = Straight
SK = Straight with Kink

**COLOR**
BK = Black

## DIMENSIONS For complete drawings, go to www.sullinscorp.com or e-mail techsupport@sullinscorp.com

Dimensions in [ ] are in millimeters, all others are in inches.

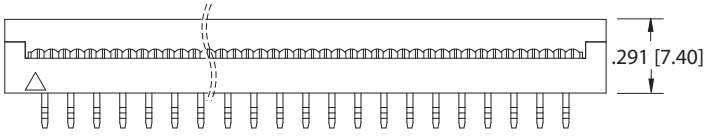


ASSEMBLED FRONT VIEW

STRAIGHT (ST) WITH KINK (SK)

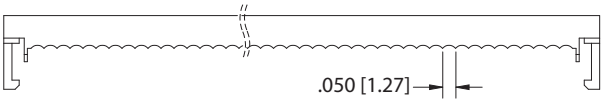


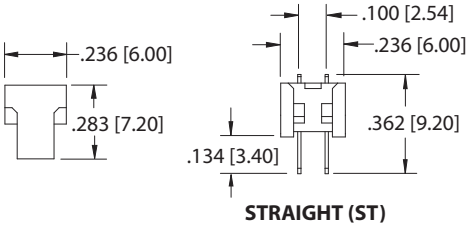


STRAIGHT (ST)
*Example P/N: SIP110-PP_C-D10-ST-BK*

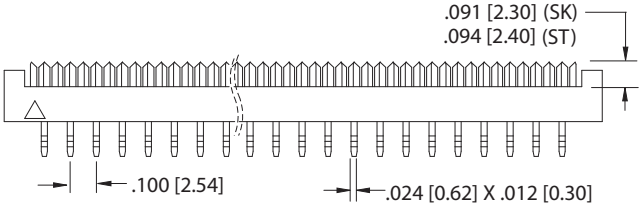


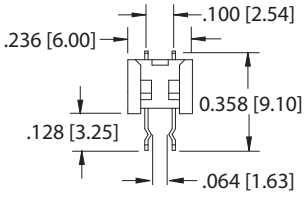


WITH KINK (SK)
*Example P/N: SIP110-PP_C-D15-SK-BK*

## Looking for pricing, stock, or lifecycle information?

Click below to explore more details on WIN SOURCE:

- View SIP110-PPPC-D13-ST-BK on WIN SOURCE
- Sullins Connector Solutions Information

## Optimize Your Supply Chain with WIN SOURCE Solutions

- Global Sourcing Solution
- Obsolete Management
- Cost Control Management
- Shortage Management
- Alternative Solution
- Excess Inventory Management