THE DATASHEET OF

MX7226KCWP+T

www.win-source.net 0086-755-83957316

19-0932; Rev 1; 4/93

MAXIM

CMOS Quad 8-Bit D/A Converters

MX7225/MX7226

General Description

Maxim's MX7225 and MX7226 each contain four 8-bit voltage-output digital-to-analog converters (DACs). They include output buffer amplifiers and input logic for simple microprocessor and TTL/CMOS interfaces. 8-bit performance is achieved over the full operating temperature range without external trimming.

The MX7225 contains double-buffered logic inputs that allow all analog outputs to be simultaneously updated using one control signal. There are also four separate reference inputs so that the range of each DAC can be independently set.

The MX7226 has separate input registers for each of its four DACs. Data is transferred into an input register from a common 8-bit TTL/CMOS-compatible input port. Address inputs A0 and A1 determine which DAC is loaded when WR goes low. All DACs share a common reference input.

For '7225 and '7226 designs utilizing a 5V supply, see the MAX505 and MAX506 data sheet.

Applications

Minimum Component Count Analog Systems
Digital Offset/Gain Adjustment
Industrial Process Control
Arbitrary Function Generators
Automatic Test Equipment
Microprocessor-Controlled Calibration

Functional Block Diagram

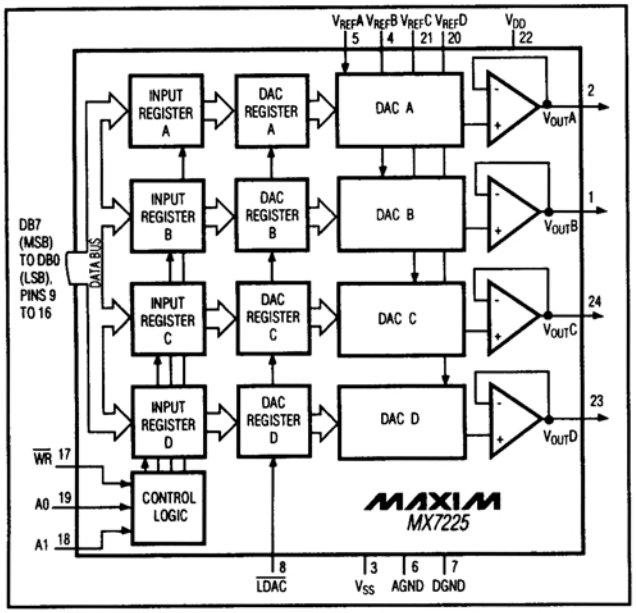

Features

- ♦ **Buffered Voltage Output**
- ♦ **Double-Buffered Inputs (MX7225)**
- ♦ **Microprocessor and TTL/CMOS Compatible**
- ♦ **Operate from Single or Dual Supplies**
- ♦ **Require No External Adjustments**

Ordering Information

PART	TEMP. RANGE	PIN-PACKAGE	ERROR (LSB)
MX7225LN	0°C to +70°C	24 Plastic DIP	±1
MX7225KN	0°C to +70°C	24 Plastic DIP	±2
MX7225LCWG	0°C to +70°C	24 Wide SO	±1
MX7225KCWG	0°C to +70°C	24 Wide SO	±2
MX7225LP	0°C to +70°C	28 PLCC	±1
MX7225KP	0°C to +70°C	28 PLCC	±2
MX7225K/D	0°C to +70°C	Dice	±2
MX7225LEWG	-40°C to +85°C	24 Wide SO	±1
MX7225KEWG	-40°C to +85°C	24 Wide SO	±2
MX7225KERG	-40°C to +85°C	24 CERDIP*	±2
MX7225CQ	-40°C to +85°C	24 CERDIP*	±1
MX7225BQ	-40°C to +85°C	24 CERDIP*	±2
MX7225UQ	-55°C to +125°C	24 CERDIP*	±1
MX7225TQ	-55°C to +125°C	24 CERDIP*	±2
MX7226KN	0°C to +70°C	20 Plastic DIP	±2
MX7226KCWP	0°C to +70°C	20 Wide SO	±2
MX7226KP	0°C to +70°C	20 PLCC	±2
MX7226K/D	0°C to +70°C	Dice	±2
MX7226KEWP	-40°C to +85°C	20 Wide SO	±2
MX7226BQ	-40°C to +85°C	20 CERDIP	±2
MX7226TE	-55°C to +125°C	20 LCC*	±2
MX7226TQ	-55°C to +125°C	20 CERDIP*	±2
MX7226TD	-55°C to +125°C	20 Ceramic SB	±2

** Contact factory for availability and processing to MIL-STD-883B.*

For pricing, delivery, and ordering information, please contact Maxim/Dallas Direct! at 1-888-629-4642, or visit Maxim's website at www.maxim-ic.com.

CMOS Quad 8-Bit D/A Converters

ABSOLUTE MAXIMUM RATINGS

V_{DD} to AGND ..... -0.3V, +17V
V_{DD} to DGND ..... -0.3V, +17V
V_{SS} to AGND ..... -7V, V_{DD}
V_{SS} to DGND ..... -7V, V_{DD}
V_{DD} to V_{SS} ..... -0.3V, +24V
Digital Input Voltage to DGND ..... -0.3V, V_{DD}
V_{REF} to AGND ..... -0.3V, V_{DD}
V_{OUT} to AGND (Note 1) ..... V_{SS}, V_{DD}

Power Dissipation (Any Package) to +75°C 500mW
Derating above +75°C ..... 2mW/°C
Operating Temperature
Commercial (MX722XK/L) ..... 0°C to +70°C
Industrial (MX722XB/C) ..... -25°C to +85°C
Military (MX722XT/U) ..... -55°C to +125°C
Storage Temperature ..... -65°C to +150°C
Lead Temperature (Soldering 10 secs) ..... +300°C

Stresses above those listed under "Absolute Maximum Ratings" may cause permanent damage to the device. These are stress ratings only and functional operation of the device at these or any other conditions above those indicated in the operational sections of the specifications is not implied. Exposure to absolute maximum rating conditions for extended periods may affect device reliability.

ELECTRICAL CHARACTERISTICS Dual Supply Specifications

(V_{DD} = +11.4V to +16.5V, V_{SS} = -5V ±10%, AGND = DGND = 0V, V_{REF} = +2V to (V_{DD} - 4V), Over Temperature unless otherwise noted.)

PARAMETER	SYMBOL	CONDITIONS	MIN.	TYP.	MAX.	UNITS
STATIC PERFORMANCE						
Resolution			8			Bits
Total Unadjusted Error		V_{DD} = +15V±5%, V_{REF} = +10V: MX7225LN/CQ/UQ All other devices			±1 ±2	LSB
Relative Accuracy		MX7225LN/CQ/UQ All Other Devices			±½ ±1	LSB
Differential Nonlinearity		Guaranteed Monotonic			±1	LSB
Full Scale Error		MX7225LN/CQ/UQ MX7225KN/BQ/TQ All other devices			±½ ±1 ±1½	LSB
Full Scale Temperature Coefficient		V_{REF} = +10V		±5		ppm/°C
Zero Code Error		MX7225LN/CQ/UQ, T_A = +25°C Over Temp. MX7225KN/BQ/TQ, T_A = +25°C All other devices, Over Temp.			±15 ±20 ±20 ±30	mV
Zero Code Temperature Coefficient				±30		µV/°C
REFERENCE INPUT						
Reference Input Voltage Range	V_{REF}		2		V_{DD} - 4	V
Reference Input Resistance	R_{REF}	MX7225 MX7226	11 2			kΩ
Reference Input Capacitance (Code Dependent, Note 3)	C_{REF}	MX7225 MX7226	 65		100 300	pF
Channel-to-Channel Isolation		V_{REF} = 10kHz, $10V_{P-P}$ (Note 2)	-60			dB
AC Feedthrough		V_{REF} = 10kHz, $10V_{p-p}$ (Note 2, 4)	-70			dB
DIGITAL INPUTS						
Digital Input High Voltage	V_{INH}		2.4			V
Digital Input Low Voltage	V_{INL}				0.8	V
Digital Input Leakage Current		V_{IN} = 0V or V_{DD}			±1	µA
Digital Input Capacitance		(Note 2)			8	pF
DYNAMIC PERFORMANCE						
Voltage Output Slew Rate		(Note 2)	3			V/µs
Voltage Output Settling Time (Pos. or Neg. Full Scale Change)		to ½LSB, V_{REF} = +10V, 2kΩ and 100pF Load (Note 2)			4	µs
Digital Feedthrough and Crosstalk		All 0's to 1's code change (Note 4)		50		nV-s
Output Load Resistance		V_{OUT} = +10V	2			kΩ

Note 1: The outputs may be shorted to AGND provided that the power dissipation of the package is not exceeded. Typical short circuit current to AGND is 25mA.
Note 2: Sample tested at +25°C to ensure compliance.
Note 3: Guaranteed by design. Not production tested.
Note 4: Feedthrough is reduced by connecting the metal lid on the ceramic package (suffix D) to DGND. (MX7226 only)

ELECTRICAL CHARACTERISTICS Dual Supply Specifications (continued)

PARAMETER	SYMBOL	CONDITIONS	MIN.	TYP.	MAX.	UNITS
POWER SUPPLIES						
V_{DD} Range		For Specified Performance	+11.4		+16.5	V
Positive Supply Current (Outputs Unloaded)	I_{DD}	MX7225KN/BQ/LN/CQ MX7225TQ/UQ MX7226			10 12 13	mA
Negative Supply Current (Outputs Unloaded)	I_{SS}	MX7225KN/BQ/LN/CQ MX7225TQ/UQ MX7226			-9 -10 -11	mA
SWITCHING CHARACTERISTICS (Note 2)						
Address to Write Setup Time	t_{AS}	Over Temp.	0			ns
Address to Write Hold Time	t_{AH}	Over Temp. MX7225 MX7226	0 10			ns
Data Valid to Write Setup Time	t_{DS}	MX7225, T_A = +25°C Over Temp. MX7226, T_A = +25°C Over Temp.	70 90 90 100			ns
Data Valid to Write Hold Time	t_{DH}	Over Temp.	10			ns
Write Pulse Width	t_{WR}	MX7225, T_A = +25°C MX7225KN/BQ/LN/CQ, Over Temp. MX7225TQ/UQ, Over Temp. MX7226, T_A = +25°C Over Temp.	95 120 150 150 200			ns
Load DAC ($\overline{LDAC}$) Pulse Width (MX7225 Only)	t_{LC}	MX7225, T_A = +25°C MX7225KN/BQ/LN/CQ, Over Temp. MX7225TQ/UQ, Over Temp.	95 120 150			ns

ELECTRICAL CHARACTERISTICS Single Supply Specifications

(V_{DD} = +15V ± 5%, V_{SS} = AGND = DGND = 0V, V_{REF} = +10V, Over Temperature unless otherwise stated.)

PARAMETER	SYMBOL	CONDITIONS	MIN.	TYP.	MAX.	UNITS
STATIC PERFORMANCE						
Resolution			8			Bits
Total Unadjusted Error		MX7225LN/CQ/UQ All other devices			±1 ±2	LSB
Differential Nonlinearity		Guaranteed Monotonic			±1	LSB
REFERENCE INPUT						
Reference Input Voltage Range	V_{REF}		2		V_{DD}-4	V
Reference Input Resistance	R_{REF}	MX7225 MX7226	11 2			kΩ
Reference Input Capacitance (Code Dependent, Note 3)	C_{REF}	MX7225 MX7226	 65		100 300	pF
Channel-to-Channel Isolation		V_{REF} = 10kHz, 10V_{P-P} (Note 2)	-60			dB
AC Feedthrough		V_{REF} = 10kHz, 10V_{P-P} (Note 2, 4)	-70			dB
DIGITAL INPUTS — All Specifications Are The Same as For Dual Supply Operation						
DYNAMIC PERFORMANCE — All Specifications Are The Same as For Dual Supply Operation						
POWER SUPPLIES						
V_{DD} Range		For Specified Performance	+14.25		+15.75	V
Positive Supply Current Output Unloaded	I_{DD}	MX7225KN/BQ/LN/CQ MX7225TQ/UQ MX7226			10 12 13	mA
SWITCHING CHARACTERISTICS — All Specifications Are The Same as For Dual Supply Operation						

CMOS Quad 8-Bit D/A Converters

Functional Block Diagram (MX7226)

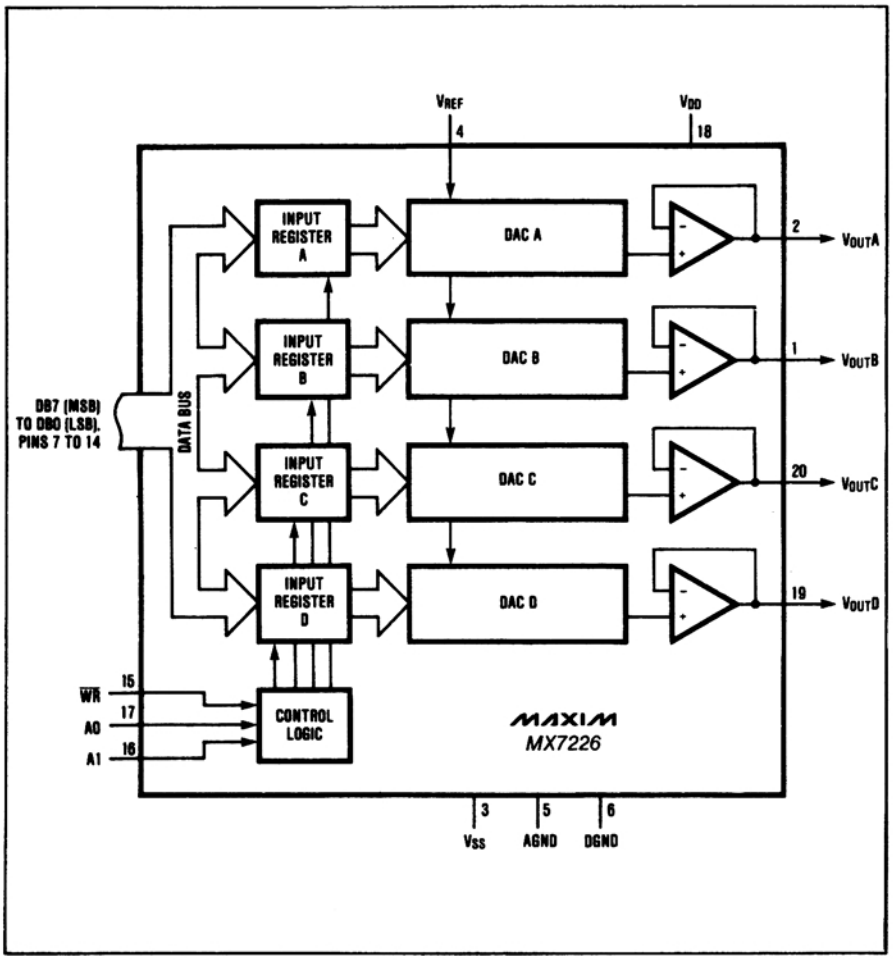

Pin Configurations

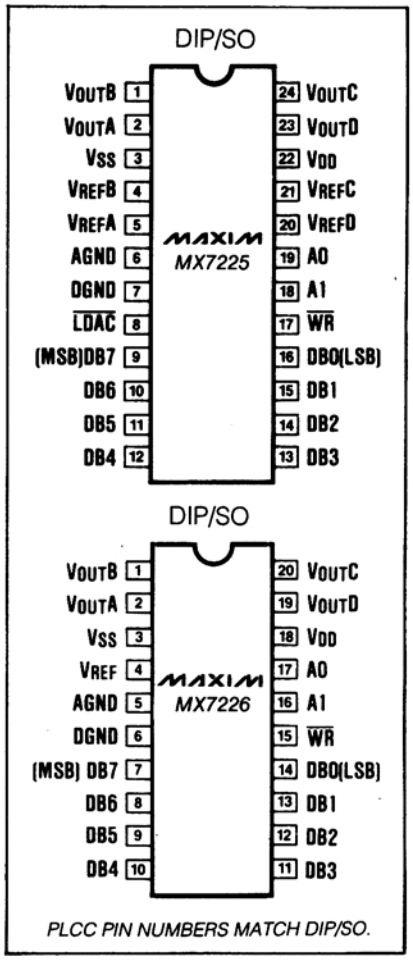

Typical Operating Characteristics

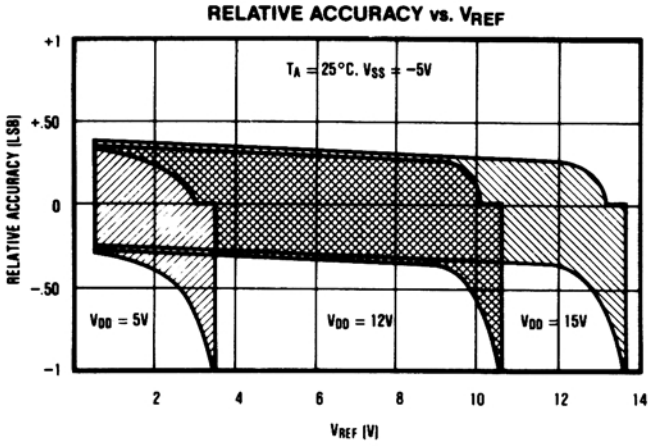

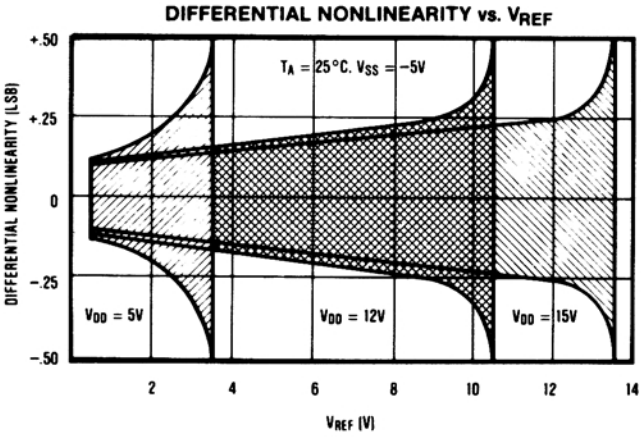

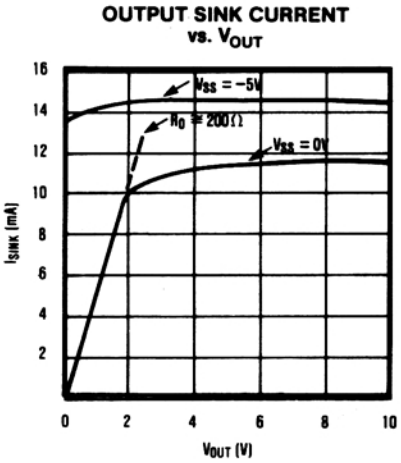

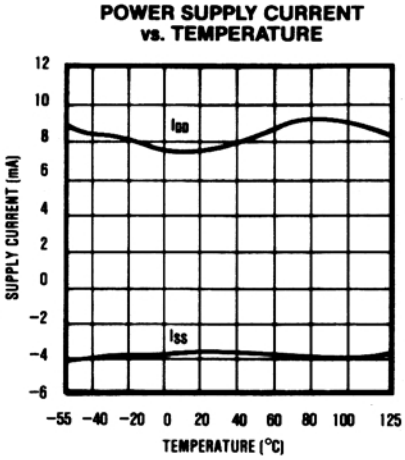

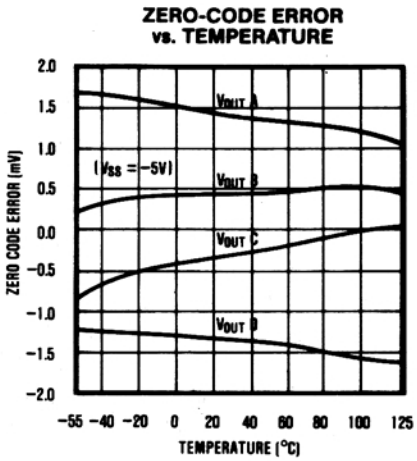

Detailed Description

The MX7225 and MX7226 have four matched voltage output digital-to-analog converters (DACs). The DAC's are "inverted" R-2R ladder networks which convert 8 bit digital words into equivalent analog output voltages in proportion to the applied reference voltage(s). Each DAC in the MX7225 has a separate reference input whereas in the MX7226, all reference inputs are tied together. A simplified circuit diagram of one of the four DACs is provided in Figure 1.

V_{REF} Input

The voltage at V_{REF} sets the full-scale output of the DAC. The input impedance of the V_{REF} input(s) is code dependent. The lowest value, approximately 11kΩ for the MX7225 and 2kΩ for the MX7226, occurs when the input code is 01010101. The maximum value is infinity, which occurs when the input code is 00000000. Because the input resistance at V_{REF} is code dependent, the DAC's reference sources must have an output impedance of no more than 20Ω for the MX7225 and 4Ω for the MX7226, to maintain output linearity. The input capacitance at V_{REF} is also code dependent and typically varies from 15pF to 35pF for the MX7225 and 100pF to 250pF for the MX7226.

V_{OUT}A, B, C, or D can be represented by a digitally programmable voltage source as:

$$V_{OUT} = N_B \times V_{REF}/256,$$

where N_B is the numeric value of the DAC's binary input code.

Output Buffer Amplifiers

All MX7225/26 voltage outputs are internally buffered by precision unity gain followers which slew at greater than 3V/µs. When driving 2kΩ in parallel with 100pF with full scale transitions (0V to +10V or +10V to 0V), the output settles to ±1/2LSB in less than 4µs. Typical dynamic response and settling performance of the MX7225 and MX7226 is shown in Figure 2 and 3.

A simplified circuit diagram of an output buffer is shown in Figure 4. Input common mode range to AGND is provided by a PMOS input structure. The improved

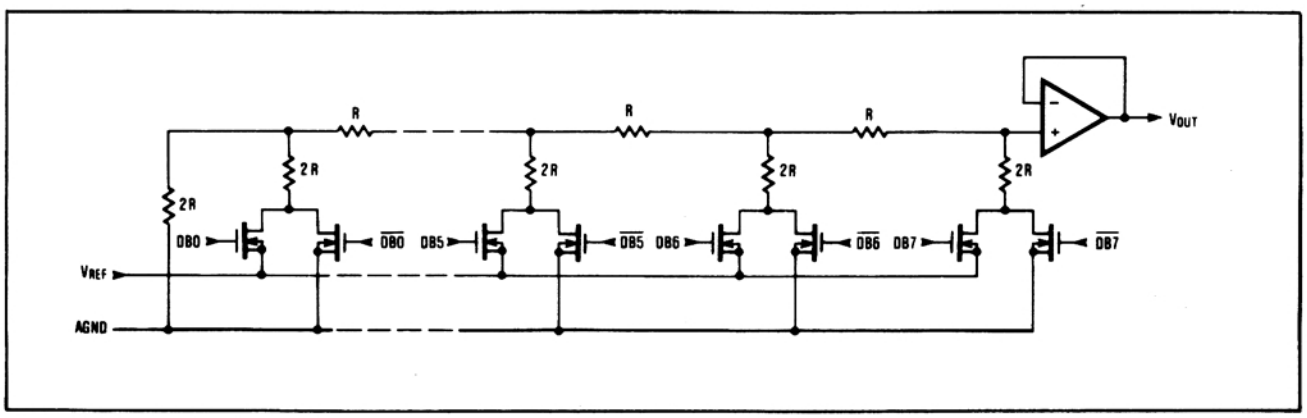

Figure 1. Simplified DAC Circuit Diagram

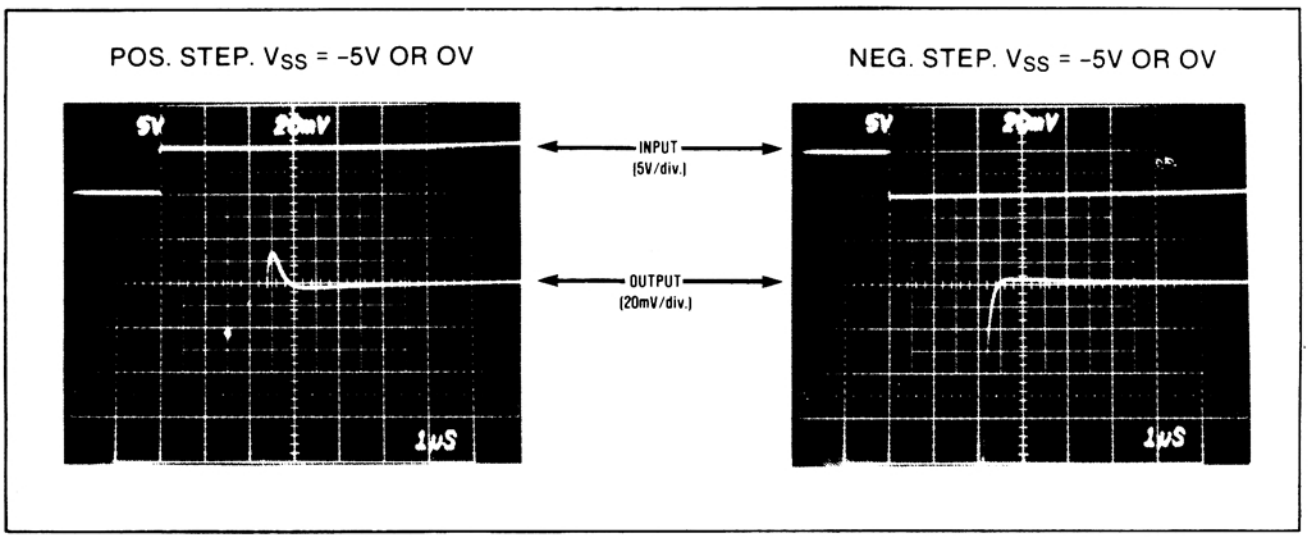

Figure 2. Positive and Negative Settling Times, V_{SS} = 0V or -5V

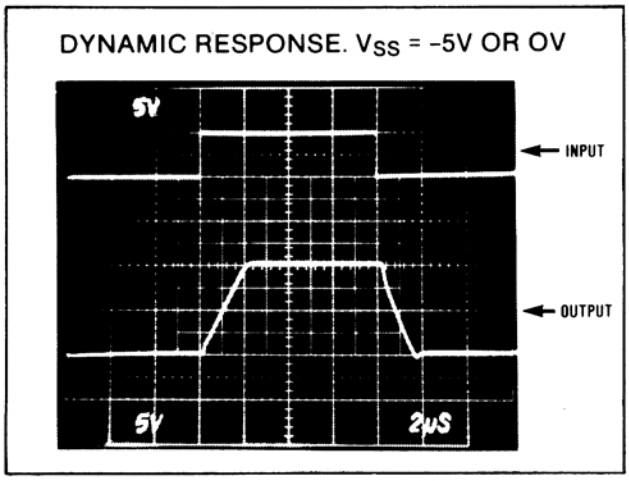

Figure 3. Dynamic Response, V_{SS} = 0V or -5V

output circuitry incorporates a Maxim proprietary pull-down circuit to actively drive V_{OUT} to within typically +15mV of the negative supply (V_{SS}). The buffer circuitry allows each DAC output to sink, as well as source, up to 5mA. This is especially important in single supply applications, where V_{SS} is connected to GND, so that zero error is kept at or under 1/2LSB (V_{REF} = +10V). A plot of output sink current versus output voltage is shown in the Typical Operating Characteristics section.

Digital Inputs and Interface Logic

The digital inputs are compatible with both TTL and 5V CMOS logic, however power supply currents, I_{DD} and I_{SS}, are somewhat dependent on input logic level. Supply currents are specified for TTL input levels (worst case) but are significantly reduced when the logic inputs are driven as close to DGND as possible, or above 4 volts.

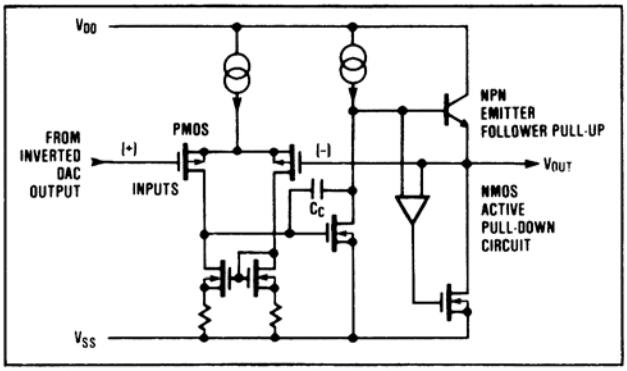

Figure 4. Simplified Output Buffer Circuit

Address lines A0 and A1 select which DAC receives data from the input port. When $\overline{WR}$ is low, the input register of the addressed DAC is transparent. The data is then latched when $\overline{WR}$ goes high. Figure 5 shows the input control logic for the MX7225 and MX7226. Table 1 lists the channel addresses.

The MX7226's four DAC outputs represent the data held in four 8 bit input registers. The MX7225 differs from the MX7226 in that in addition to the input registers, there is a separate DAC register for each DAC as well. A DAC's analog output is based only on the contents of its DAC register. Data is transferred from the input registers to the DAC registers by the $\overline{LDAC}$ input. When $\overline{LDAC}$ is LOW, all four DAC registers are transparent to the input registers so that all DACs are updated simultaneously. With $\overline{LDAC}$ held LOW, the MX7225 interface behaves like the MX7226.

Since $\overline{LDAC}$ (MX7225 only) is asynchronous with respect to $\overline{WR}$, care must be taken to assure that incorrect data is not latched through to the output. If $\overline{LDAC}$ is brought LOW before or at the same time that $\overline{WR}$ goes HIGH, then $\overline{LDAC}$ must remain LOW for at least t_{LD} to ensure that the correct data is latched. Data is latched into all four DAC registers on the

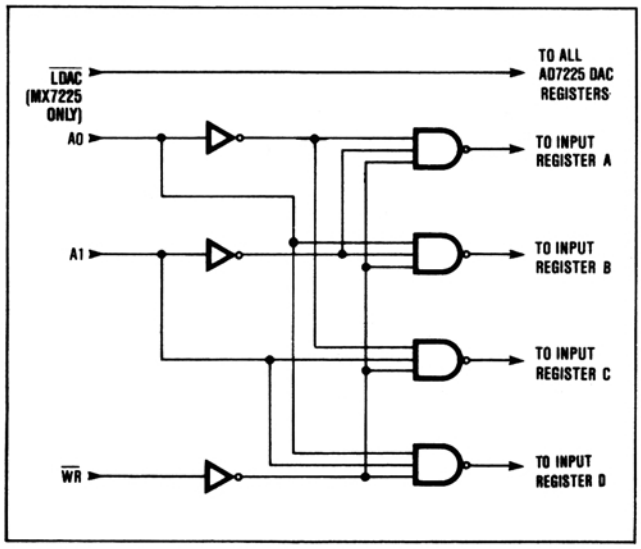

Figure 5. MX7225, MX7226 Input Control Logic

Table 1. DAC Addressing

A1	A0	SELECTED INPUT REGISTER
L	L	DAC A Input Register
L	H	DAC B Input Register
H	L	DAC C Input Register
H	H	DAC D Input Register

Table 2. MX7225, MX7226 Write Cycle Truth Table

$\overline{WR}$	$\overline{LDAC}$ (MX7225 ONLY)	FUNCTION
H	H	No operation. Device deselected.
L	H	Input register of selected DAC transparent.
↓	H	Latch the input register of selected DAC.
H	L	(MX7225 only) All four DAC registers transparent i.e. DAC outputs reflect the data held in their respective input registers. Input registers are latched.
H	↓	(MX7225 only) Latch the four DAC registers. Input registers are latched.
L	L	(MX7225 only) DAC Registers and the selected input register transparent. DAC output follows input data for selected channel.

rising edge of $\overline{LDAC}$. Table 2 shows the truth table for $\overline{WR}$ and $\overline{LDAC}$ operation. Figure 6 shows the write cycle timing for both the MX7225 and MX7226.

Applications Information

Power Supply and Reference Operating Ranges

The MX7225 and MX7226 are fully specified to operate with V_{DD} between +12V ± 5% and +15V ± 10% (+11.4V to +16.5V), and with V_{SS} from 0V to -5.5V. 8 bit performance is also guaranteed for single supply operation (V_{SS} = 0V), however zero code error is reduced when V_{SS} is -5V (see Output Buffer Amplifier).

For adequate DAC and buffer operating range, the V_{REF} voltage must always be at least 4V below V_{DD}. Both the MX7225 and MX7226 are specified to operate with a reference input range of +2V to V_{DD} - 4V.

Ground Management

Digital or AC transient signals between AGND and DGND will create noise at the analog outputs. It is recommended that AGND and DGND be tied together at the DAC and that this point be tied to the highest quality ground that is available. If separate ground busses are used, then two clamp diodes (IN914 or equivalent) should be connected between AGND and DGND to keep the two ground busses within one diode drop of each other. To avoid parasitic device turn-on, AGND must not be allowed to be more negative than DGND. DGND should be used as supply ground for bypassing purposes.

Careful PCB ground layout techniques should be used to minimize crosstalk between DAC outputs, the reference input(s), and the digital inputs. This is particularly important if the reference is driven from an AC source. Figure 7 and 8 show suggested circuit board layouts for minimizing crosstalk.

Unipolar Output

In unipolar operation, the output voltages and the reference input(s) are the same polarity. Unipolar circuit configurations are shown in Figure 9 and 10 for the MX7225 and MX7226. Both devices can be operated from a single supply with a slight increase in zero error (see Output Buffer Amplifier section). To avoid parasitic device turn-on, the voltage at V_{REF} must always be positive with respect to DGND. The unipolar code table is given in Table 3.

Bipolar Output

Each DAC output may be configured for bipolar operation using the circuit in Figure 11. One op-amp and two resistors are required per channel. With R1 = R2:

$$V_{OUT} = V_{REF}(2D_A - 1),$$

where D_A is a fractional representation of the digital word in register A.

Table 4 shows the digital code versus output voltage for the circuit in Figure 11.

CMOS Quad 8-Bit D/A Converters

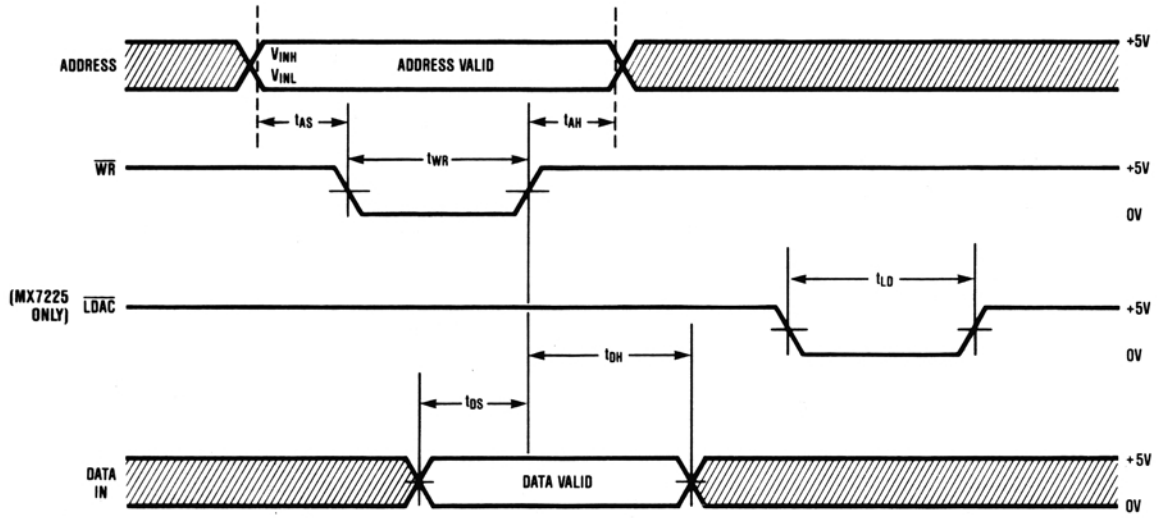

Notes:

1. All input signal rise and fall times measured from 10% to 90% of +5V $t_r = t_f = 20ns$ over V_{DD} range.
2. Timing measurement reference level is,

$$\frac{V_{INH} + V_{INL}}{2}$$

3. If $\overline{LDAC}$ (MX7225 only) is activated prior to the rising edge of $\overline{WR}$, then it must stay low for t_{LD} (or longer) after $\overline{WR}$ goes high.

Figure 6. Write Cycle Timing Diagram

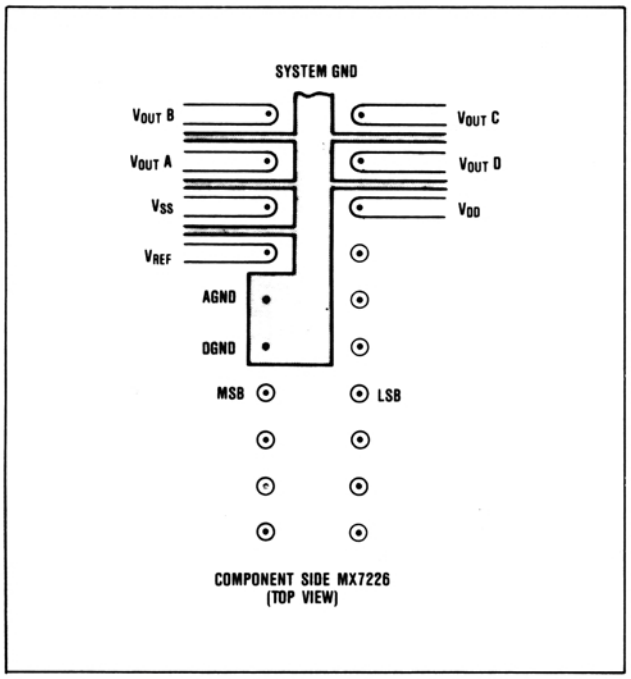

Figure 7. Suggested MX7226 PCB Layout for Minimizing Crosstalk

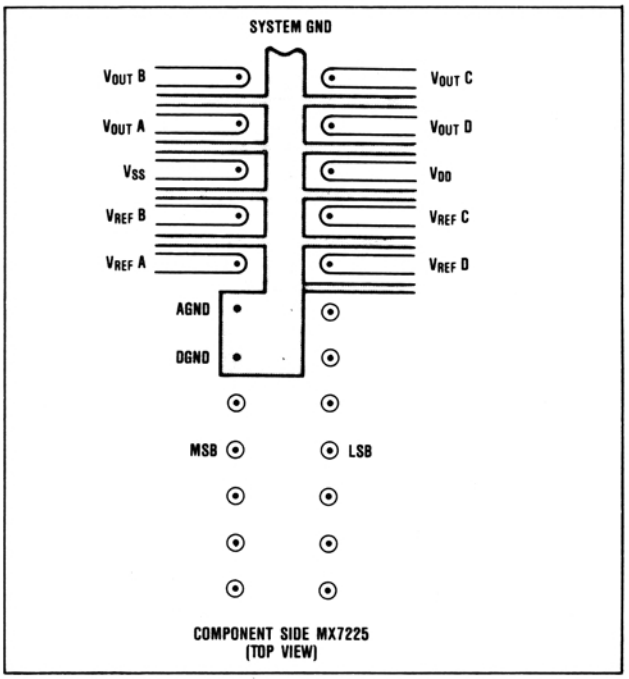

Figure 8. Suggested MX7225 PCB Layout for Minimizing Crosstalk

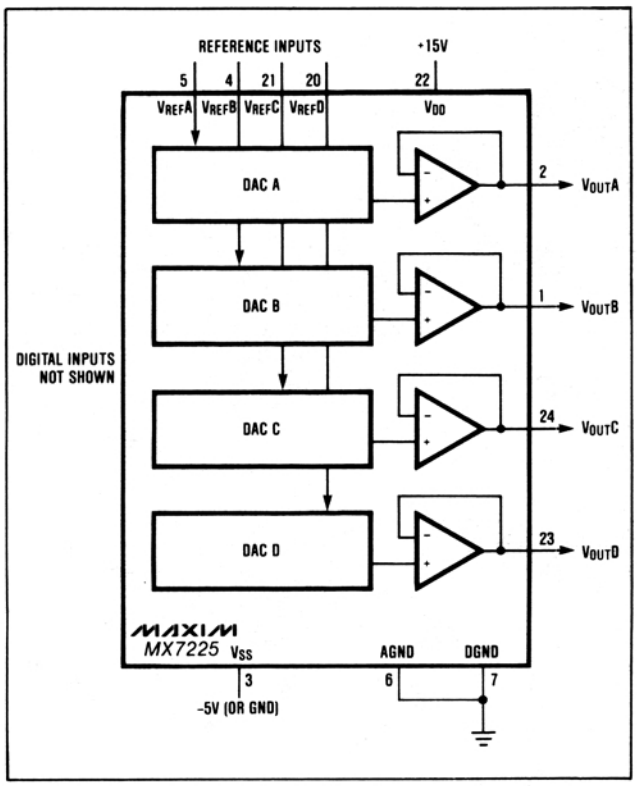

Figure 9. MX7225 Unipolar Output Circuit

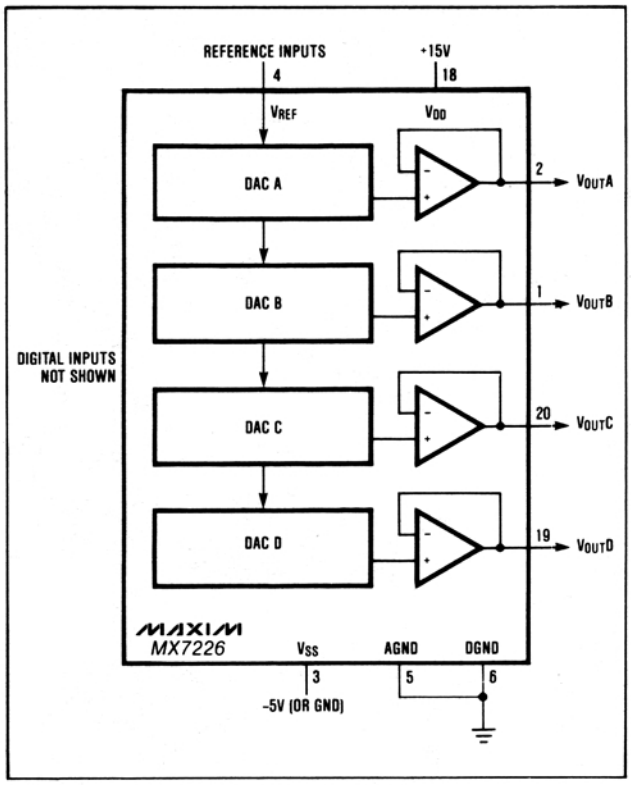

Figure 10. MX7226 Unipolar Output Circuit

Table 3. Unipolar Code Table

DAC CONTENTS MSB	LSB	ANALOG OUTPUT
1 1 1 1	1 1 1 1	$+V_{REF}\left(\frac{255}{256}\right)$
1 0 0 0	0 0 0 1	$+V_{REF}\left(\frac{129}{256}\right)$
1 0 0 0	0 0 0 0	$+V_{REF}\left(\frac{128}{256}\right) = +\frac{V_{REF}}{2}$
0 1 1 1	1 1 1 1	$+V_{REF}\left(\frac{127}{256}\right)$
0 0 0 0	0 0 0 1	$+V_{REF}\left(\frac{1}{256}\right)$
0 0 0 0	0 0 0 0	0V

Note: $1LSB = (V_{REF})(2^{-8}) = +V_{REF}\left(\frac{1}{256}\right)$

Table 4. Bipolar Code Table

DAC CONTENTS MSB	LSB	ANALOG OUTPUT
1 1 1 1	1 1 1 1	$+V_{REF}\left(\frac{127}{128}\right)$
1 0 0 0	0 0 0 1	$+V_{REF}\left(\frac{1}{128}\right)$
1 0 0 0	0 0 0 0	0V
0 1 1 1	1 1 1 1	$-V_{REF}\left(\frac{1}{128}\right)$
0 0 0 0	0 0 0 1	$-V_{REF}\left(\frac{127}{128}\right)$
0 0 0 0	0 0 0 0	$-V_{REF}\left(\frac{128}{128}\right) = -V_{REF}$

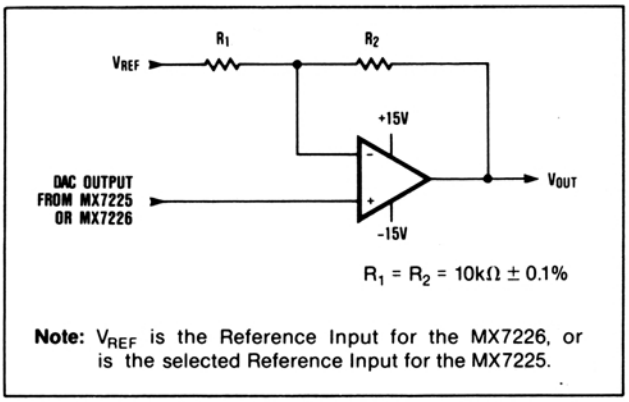

Figure 11. Bipolar Output Circuit

Offsetting AGND

AGND can be biased above DGND to provide an arbitrary nonzero output voltage for a "zero" input code. This is shown in Figure 12. The output voltage at $V_{OUT}A$ is:

$$V_{OUT}A = V_{BIAS} + D_A V_{IN},$$

where D_A is a fractional representation of the digital input word. Since AGND is common to all four DAC's, all outputs will be offset by V_{BIAS} in the same manner.

Using an AC Reference

In applications where V_{REF} has AC signal components, the MX7225 and MX7226 have multiplying capability within the limits of the V_{REF} input range specifications. Figure 13 shows a technique for applying a sine wave signal to the reference input where the AC signal is biased up before being applied to V_{REF}. Output distortion is typically less than 0.1% with input frequencies up to 50kHz, and the typical -3dB frequency is 700kHz. Note that V_{REF} must never be more negative than AGND.

Generating V_{SS}

The performance of the MX7225/7226 is specified for both dual and single supply (V_{SS} = 0V) operation. When the improved performance of dual supply operation is desired, but only a single supply is available, a -5V V_{SS} supply can be generated using an ICL7660 in one of the circuits of figure 14.

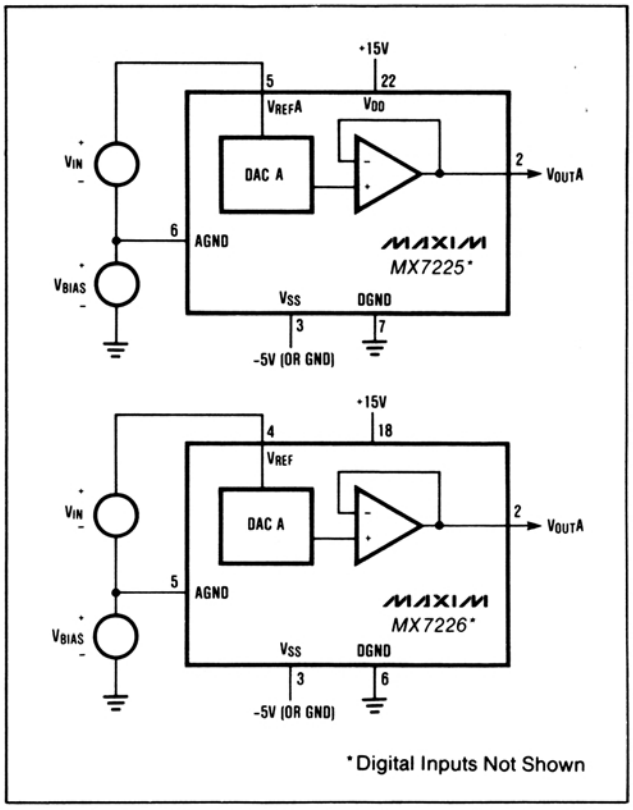

Figure 12. AGND Bias Circuits

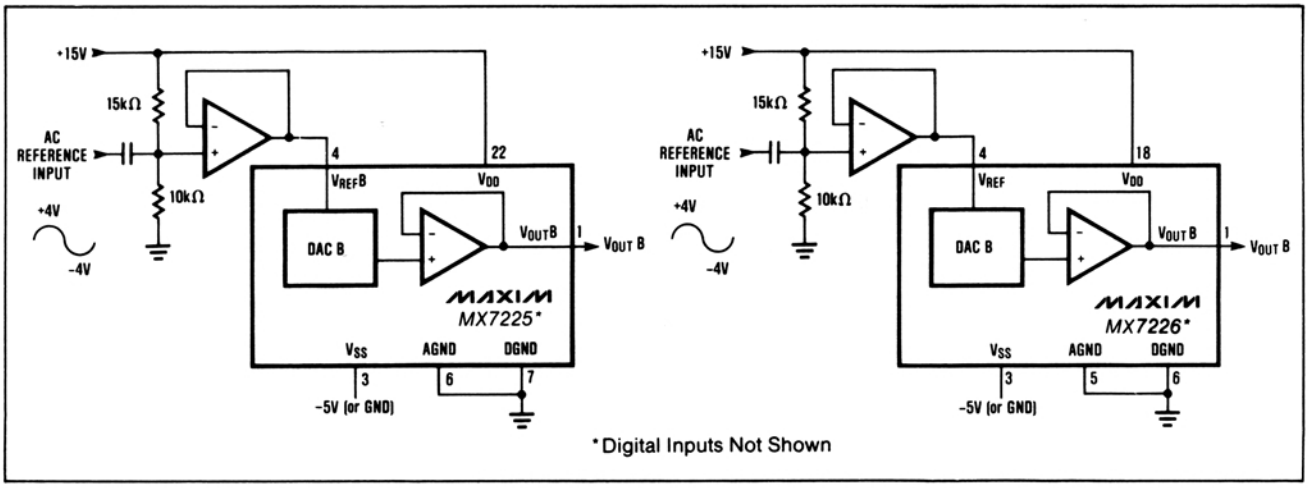

Figure 13. AC Reference Input Circuit

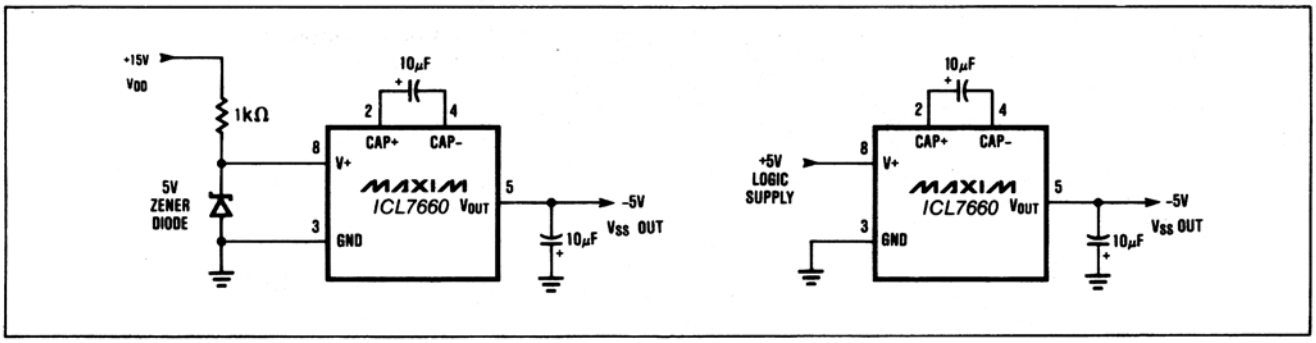

Figure 14. Generating -5V for V_{SS}

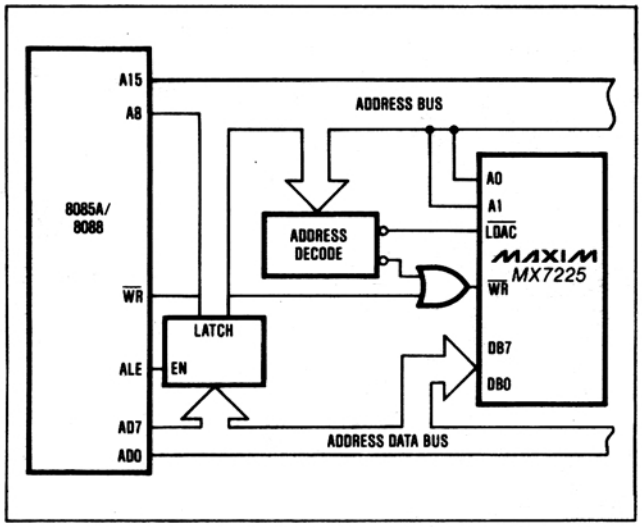

Figure 15. MX7225 to 8085A/8088 Interface, Double-Buffered Mode

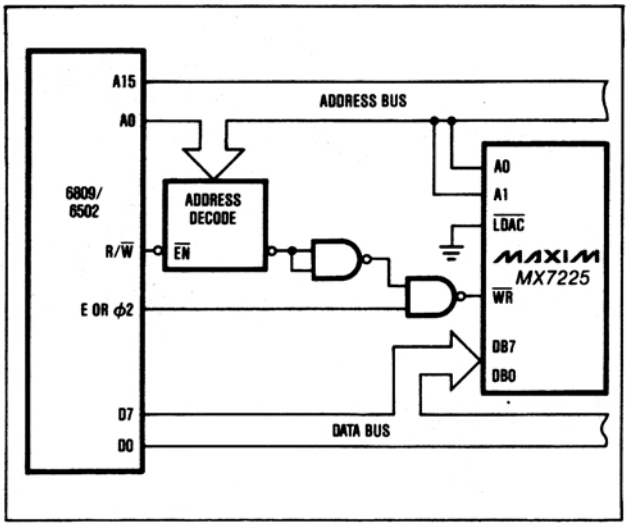

Figure 16. MX7225 to 6089/6502 Interface, Single-Buffered Mode

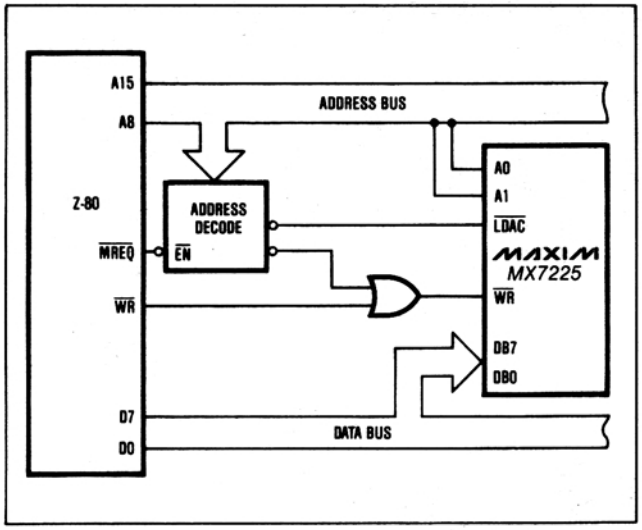

Figure 17. MX7225 to Z-80 Interface Double-Buffered Mode

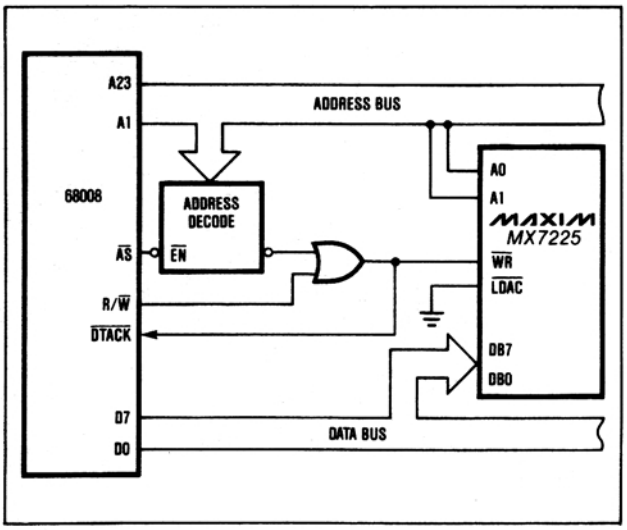

Figure 18. MX7225 to 68008 Interface, Single-Buffered Mode

CMOS Quad 8-Bit D/A Converters

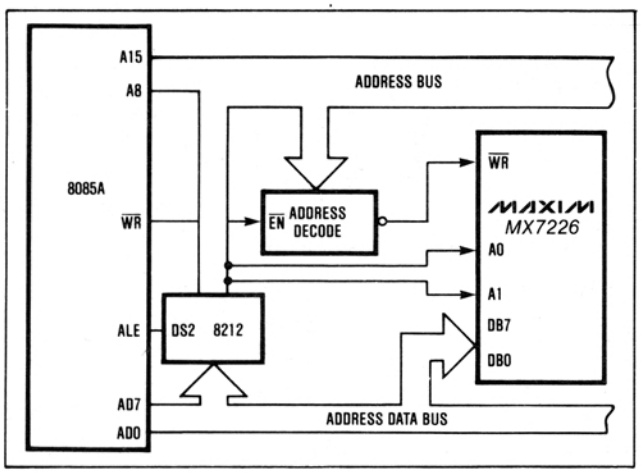

Figure 19. MX7226 to 8085A Interface

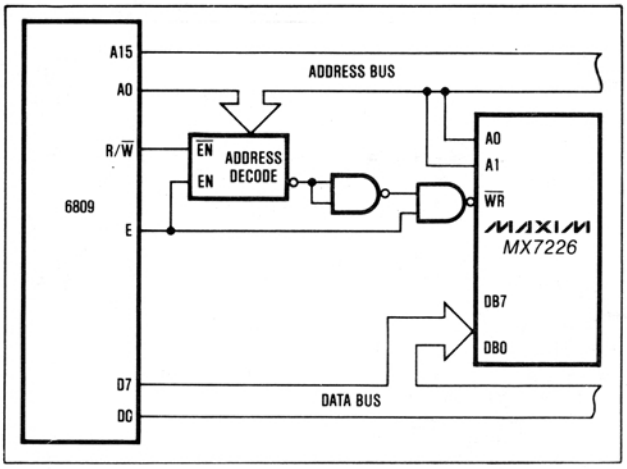

Figure 20. MX7226 to 6809 Interface

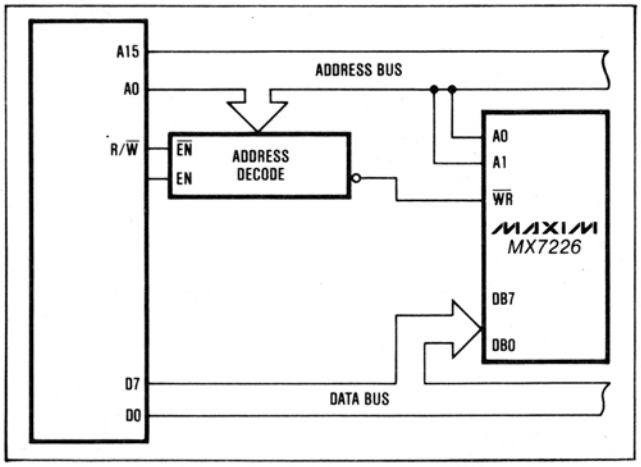

Figure 21. MX7226 to 6502 Interface

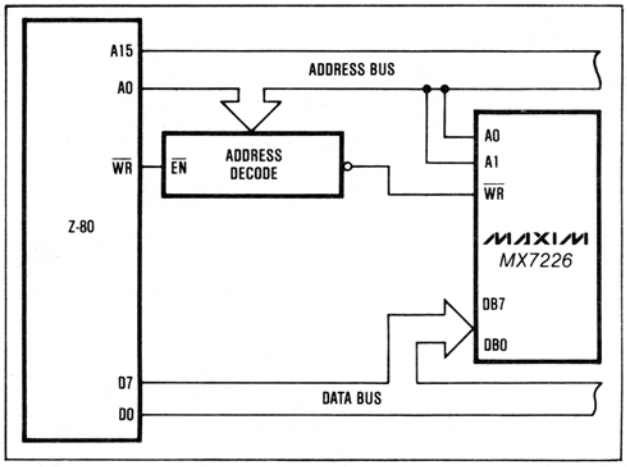

Figure 22. MX7226 to Z-80 Interface

Chip Topography

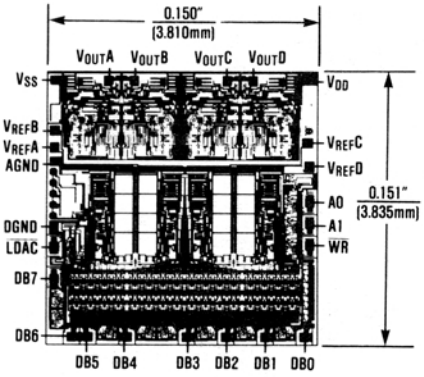

MX7225

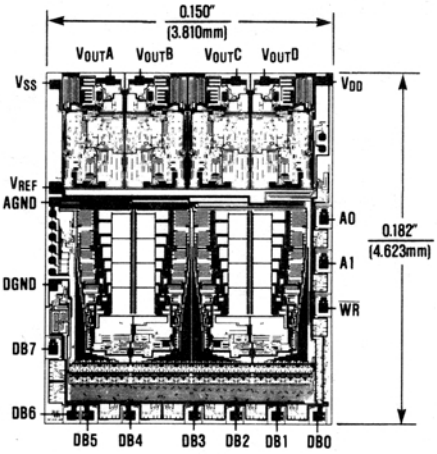

MX7226

Maxim cannot assume responsibility for use of any circuitry other than circuitry entirely embodied in a Maxim product. No circuit patent licenses are implied. Maxim reserves the right to change the circuitry and specifications without notice at any time.

© 1993 Maxim Integrated Products Printed USA MAXIM is a registered trademark of Maxim Integrated Products.

Looking for pricing, stock, or lifecycle information?

Click below to explore more details on WIN SOURCE:

- View MX7226KCWP+T on WIN SOURCE
- Maxim Integrated Information

Optimize Your Supply Chain with WIN SOURCE Solutions

- Global Sourcing Solution
- Obsolete Management
- Cost Control Management
- Shortage Management
- Alternative Solution
- Excess Inventory Management